सत्यमेव जयते

Agenda for

90th PCCM

Govt. of India

Ministry of Power

North Eastern Regional Power Committee

Shillong

North Eastern Regional Power Committee

Agenda for

90th Protection Coordination Sub-Committee Meeting

Date: 23/06/2026 (Tuesday)

Time: 11:00 hrs.

Venue: NERPC Conference Hall, Shillong

A. CONFIRMATION OF MINUTES

1. CONFIRMATION OF MINUTES OF THE 89th PROTECTION SUB-COMMITTEE MEETING OF NERPC.

Minutes of the 89th PCC Meeting held on 21st April, 2026 at NERPC Conference Hall, Shillong was circulated vide letter No.: NERPC/SE(P)/PCC/2026/413-454

Since, no comments were received from the constituents, the Sub-committee may confirm the minutes of the 89th PCCM

B. ITEMS FOR DISCUSSION

B.1 Protection Audit of NER:

As per the protection code of IEGC 2023 following roles and responsibilities, related to the subject mentioned, of constituents have been defined–

Description		Constituent	Responsibility	Timeline
	Internal Audit		Shall conduct internal audit of protection system	Annually
			Audit report to be shared with RPC	Within 30 days of Audit

Audit		All users (132kV and above)	Action plan for rectification of deficiencies to be shared with RPC	Within 30 days of Audit
	Third party Audit	All users (132kV and above)	Shall conduct audit for each SS	Once in five years
			Shall conduct audit on advice of RPC	Within three months of advice of RPC
			Audit report to be submitted to RPC and NERLDC/SLDC	Within a month of submission of third-party audit report
			Action plan for rectification of deficiencies	Same as above
		RPC	Compliance to audit reports to be followed up regularly	Not specified
		RPC	After analysis of any event, shall identify substations where audit is required to be carried out	Conditional responsibility
	Annual audit plan	All users	Annual audit plan to be submitted to RPC by ***31st October***	Annual

Status of Internal/External audit (89th PCCM)

Sr No	Utility/ Constituents	Internal Audit		External audit	
		Latest Status	**report**	**Latest Status**	**report**
1.	Ar. Pradesh	Audit of substations other than	Report for Daporijo, Khupi	Planning and Tendering will be done for audit of all 9	NA

		Daporijo, Khupi, Tenga and Lekhi will be done September onwards. (Total Substation: 09)	and Tenga shared.	SS. Proposal has been put up to the government for funding approval. (audit of 3 SS done by NERPC). As requested by DoP, AP, the criteria for vendor list for audit will be furnished by NERPC	
2.	Assam	Done. (Total Substation: 82)	All the reports shared	The matter is being pursued with AERC for inclusion of the cost in the tariff. Meetings with AERC are underway. It is planned to conduct audit of 20 substations by next year.	
3.	Manipur	Planning being done for next FY (2026-27) (Total Substation: 17)		17 SS to be done, Schedule to be decided, subject to funding approval and law and Order situation. Audit of Yurembam ss, Ningthoukhong SS and Imphal (PG) were done by NERPC in Aug'25	NA
4.	Meghalaya	Completed for FY 2025-26 (Total Substation: 22)	Reports of 6 SS submitted, rest to be sent shortly.	Audit of 19 substations done, 13 by CPRI and 6 by NERPC	Reports submitted

5.	Mizoram	Audit of 3 substations done. Rest of the audits will be taken up shortly. (Total Substation: 13)		During the 31st NERPC meeting, Hon'ble Power Minster agreed for Sanctioning the budget for proposed audit. Subsequently, an offer has been solicited from M/s PRDC and the process for award of tender, to be done shortly. Audit of Kolasib, Aizawl, Melriat (PG), Zuangtui and Luangmual were done by NERPC in October'25.	
6.	Nagaland	9 out of 11 SS done. Audits of Zadima and Likhimro are in process.	Reports for 9S/s have been submitted.	Audit of six Substations has been done by NERPC in Jan'26. Zhadima done. For other substations, audit to be done by external agencies and the matter is under discussion at higher levels. Audit firms are being finalized	
7.	Tripura	16 done, two substations, Manu and Amarpur have been recently	Reports shared	M/s ERDA has emerged as the lowest (L1) bidder for undertaking the audit. In the first	

		commissioned under NERPSIP project and are yet to be handed over to the state. (Total Substation: 18)		phase, a total of nine substations has been identified for the audit. The Letter of Award (LoA) has been issued, and the agency is expected to mobilize and commence activities, with their team scheduled to arrive within one week.	
8.	Powergrid (NERTS)	22 Substations done	Report for 16 S/s has been shared.	Budgetary offer will be taken after SAS upgradation 400kV substations. Audit of 9 substations have been done by NERPC so far. Balance order has been placed.	
9.	NTL	Audit of P K Bari and S M Nagar to be done in March'26. (Utility absent)		Feb, March'26. (Utility absent)	
10	KMTL	Done	submitted	Done by M/s ERDA	Report by May'26
12	NEEPCO (Total Substation: 10)	Completed.	Audit report of Khandong and Tuirial submitted. For rest, will be	External Audit completed for 3 stations such as AgGBPS in Jan'22, Kameng done by M/s PRDC in Dec'25.	Report of Kameng will be submitted as soon as it is provided

			submitted shortly	Tuirial done in Feb'26. Upcoming: Pare-June'26 PLHPS -June'26 AGTCCPP – done AGBPS – last week of April'26 Monarchak – Sep'26 Doyang- June'26 Order has been issued to M/s CPRI for the audit of AGBPS.	by M/s PRDC
16	APGCL	Will share the plan next week		Will share the plan next week	
17	TPGCL	TSCEL will write a letter to TPGCL on the matter			
18	MEPGCL	All done	All reports shared	Budgetary offer received from M/s CPRI, M/s CBIP and M/s PRDC. The audits will incur very high financial burden. It was requested to NERPC to conduct the audit of the generating stations. NERPC opined that they may consider conducting the audit of some stations based on criticality.	

Utilities that have complied with the regulation

1. MUML, NBTL
2. OTPC
3. NTPC
4. NHPC
5. Dikshi HEP

Utilities may further update

B.2 <u>Ensuring active participations of NER states for ensuring effective utilization of the PDMS and PSCT software</u>

Protection Database Management System (PDMS) and Protection Settings Calculation Tools (PSCT) have been in operation in NER since 2019 and the project has entered into 7th year AMC period from 19th May'26. These systems are critical for making a database of protection relay settings implemented in NER, which is a regulatory requirement and also for ensuring coordinated relay settings for NER grid. The project has been planned and implemented with the vision that the NER utilities would use it effectively to strengthen their protection systems and make NER grid resilient. Further, software licences were also provided by the OEM (M/s PRDC) for using the software.

In the last few years, the concern has risen that the NER power utilities are lacking interest in using these software(s) for relay settings updation and protection coordination studies for their respective networks. This has led to the problem of underutilisation of the system.

In this regard, it is requested to NER power utilities to realise the criticality of the software(s) and show keen interest in using them and strengthen their protection systems.

In 89th PCCM, MS NERPC emphasized the critical importance of PDMS and PSCT systems in strengthening of protection system network of NER grid and stressed that these tools should be widely utilised by the constituents to realize its intended benefits.

Subsequently a list of nodal officers was prepared to facilitate seamless coordination with the implementing agency and ensure effective utilisation of the PDMS system. The utilities provided the details of nodal officers as follow –

Utility	Name	Contact no.
AR. Pradesh		
AEGCL		
APGCL	P B Sarmah, DGM, HQ	9435358402
	J P Bailung, AGM, LTPS/LRPP	7002759516
	R D Barman, DGM, KLHEP	9401702372
	Rasewel Iercon, AGM, NRPP	9401659361
Manipur	Roshan Oinam, DGM	9863895218
	Anil Shairem, Sr. Manager	8798012496
Nagaland	Alex E Nguillie	8837080321
MepTCl	Kitbok Syrti, EE	8974595356
MePGCL		
Mizoram	C. Daniela, EE	9774692350
NERLDC	Utpal Das, DM	7005504075
NEEPCO	Bhaskar Majumdar, DGM	9436222650
Powergrid	M J Baishya, Ch. Manager	9435555740
NHPC	J Pani, Sr. Manager	8800021271
NTPC	G Sonowal, DGM	8269609797
OTPC	S Choudhary, Head Operation	8837008091

Further, the following specific matters to be discussed in the meeting –

1. M/s PRDC is requested to provide a gist of work done during the first month of the 7th year AMC of the system.
2. States may update on steps taken towards increasing adoption of the software for Protection studies
3. The PSCT license of many utilities have been lost or misplaced causing the non-utilisation of the software. Out of 31 originally distributed licenses only 10 have been recovered. In this regard it is proposed that M/s PRDC may arrange for 21 new licenses so that the utilities (without the licenses) may start using the software.

Members may discuss.

B.3 Draft Guidelines for Harmonic Measurements at Transmission Level

In the 17th meeting of NPC held on 27.02.2026 at Vizag, Andhra Pradesh, the issue of Uniform criteria on Harmonics measurement in the grid was discussed. Grid-India presented its draft report on the criteria. It was decided that Grid-India report to be examined by RPCs in coordination with RLDCs and other stakeholders.

The draft guidelines Harmonic Measurements at Transmission Level and the presentation given by NLDC are attached herewith (**annexure B.3.1 and B.3.2**).

NPC division CEA has requested RPCs to submit the comments and recommendations within one month for further deliberation in the NPC Protection Sub-Group, after which the guidelines shall be finalized and submitted to the upcoming NPC meeting for further deliberation and approval.

Members may discuss.

B.4 Analysis and Discussion on Grid Disturbances which occurred in NER grid in April and May'26 in compliance with IEGC 2023:

TABLE 8 : REPORT SUBMISSION TIMELINE

Sr. No.	Grid Event^ (Classification)	Flash report submission deadline (users/ SLDC)	Disturbance record and station event log submission deadline (users/ SLDC)	Detailed report and data submission deadline (users/ SLDC)	Draft report submission deadline (RLDC/ NLDC)	Discussion in protection committee meeting and final report submission deadline (RPC)
1	GI-1/GI-2	8 hours	24 hours	+7 days	+7 days	+60 days
2	Near miss event	8 hours	24 hours	+7 days	+7 days	+60 days
3	GD-1	8 hours	24 hours	+7 days	+7 days	+60 days
4	GD-2/GD-3	8 hours	24 hours	+7 days	+21 days	+60 days
5	GD-4/GD-5	8 hours	24 hours	+7 days	+30 days	+60 days

^*The classification of Grid Disturbance (GD)/Grid Incident (GI) shall be as per the* CEA Grid Standards.

The forum may deliberate upon the GD/GI/near miss events that occurred in April and May 2026 based on the draft report prepared by NERLDC.

B.5 Status of submission of FIR, DR & EL outputs for the Grid Events for the month of Apr'2026 & May'2026:

In line with regulation 12 (1) of CEA Grid Standards Regulations and IEGC-23 provision under clause 37.2 (c), FIR and DR & EL Outputs for each grid events are required to be submitted by concerned utilities to NERLDC for detailed investigation and analysis.

Status of uploading of FIR, DR & EL outputs of tripping of transmission elements in Tripping Monitoring Portal for events from 01-04-2026 to 31-05-2026 as on **15-06-2026** is given below:

Owner Name	**Total No of FIR/ DR/EL to be submitted (SEND+ REND)**	**FIR**		**DR**		**EL**	
		Total Furnished in 24hrs %	Total furnished %	Total Furnished in 24hrs %	Total furnished %	Total Furnished in 24hrs %	Total furnished %
AEGCL	137	2.19%	61.31 %	5.84%	65.69%	9.49%	64.96%
APGCL	1	0.00%	100.00 %	0.00%	100.00%	0.00%	100.00 %
DoP, Ar. Pradesh	37	56.76%	78.38 %	59.46 %	89.19%	56.76%	81.08%
DoP, Nagaland	20	50.00%	100.00 %	10.00 %	90.00%	30.00%	90.00%
MePGCL GENERATION	5	100.00 %	100.00 %	40.00 %	100.00%	40.00%	100.00 %

MePGCL TRANSMISSION	23	8.70%	100.00%	30.43%	100.00%	21.74%	100.00%
MePTCL	38	100.00%	100.00%	100.00%	100.00%	71.05%	100.00%
MSPCL	49	42.86%	97.96%	28.57%	63.27%	28.57%	59.18%
NBTL	3	33.33%	66.67%	33.33%	66.67%	33.33%	66.67%
NEEPCO GENERATION	30	53.33%	93.33%	56.67%	100.00%	56.67%	100.00%
NEEPCO TRANSMISSION	54	74.07%	90.74%	72.22%	90.74%	51.85%	90.74%
NHPC	26	69.23%	96.15%	46.15%	96.15%	42.31%	92.31%
NHPC	19	15.79%	100.00%	36.84%	100.00%	31.58%	100.00%
NTL	5	0.00%	100.00%	0.00%	80.00%	0.00%	80.00%
OTPC	3	33.33%	100.00%	33.33%	100.00%	0.00%	66.67%
P&ED, Mizoram	24	45.83%	100.00%	29.17%	100.00%	33.33%	100.00%
POWERGRID	78	56.41%	92.31%	61.54%	89.74%	58.97%	87.18%
TSECL	39	51.28%	100.00%	53.85%	94.87%	48.72%	94.87%

Concerned Utilities are requested to upload Disturbance Recorder (DR), Event Logger (EL) outputs for grid events along with a First Information Report (FIR) in Tripping Monitoring Portal (https://tripping.nerldc.in/Default.aspx) for analysis purpose. In light of the cybersecurity measures implemented by Grid India to safeguard sensitive information, NERLDC has created the email address nerldcso3@gmail.com . This new account has been specifically set up to facilitate

the secure exchange of DR and EL files that have previously faced blockage when sent to nerldcprotection@grid-india.in.

Also, all utilities are requested to nominate a nodal officer responsible for the submission of FIR, DR & EL in Tripping Monitoring Portal (https://tripping.nerldc.in/Default.aspx)

Members may discuss.

B.6 Submission of Detailed Report by User/SLDC as per IEGC-2023:

As per IEGC-2023, all User/SLDCs are requested to prepare and share **Flash Report** and **Detailed Report** with **NERLDC** and **NERPC** following any Grid Events as per the timeline mentioned in the cl 37.2(f). Status of submission of the Detailed Report for the month of **Apr'2026** & **May'2026** as on **15-06-2026** is shown below:

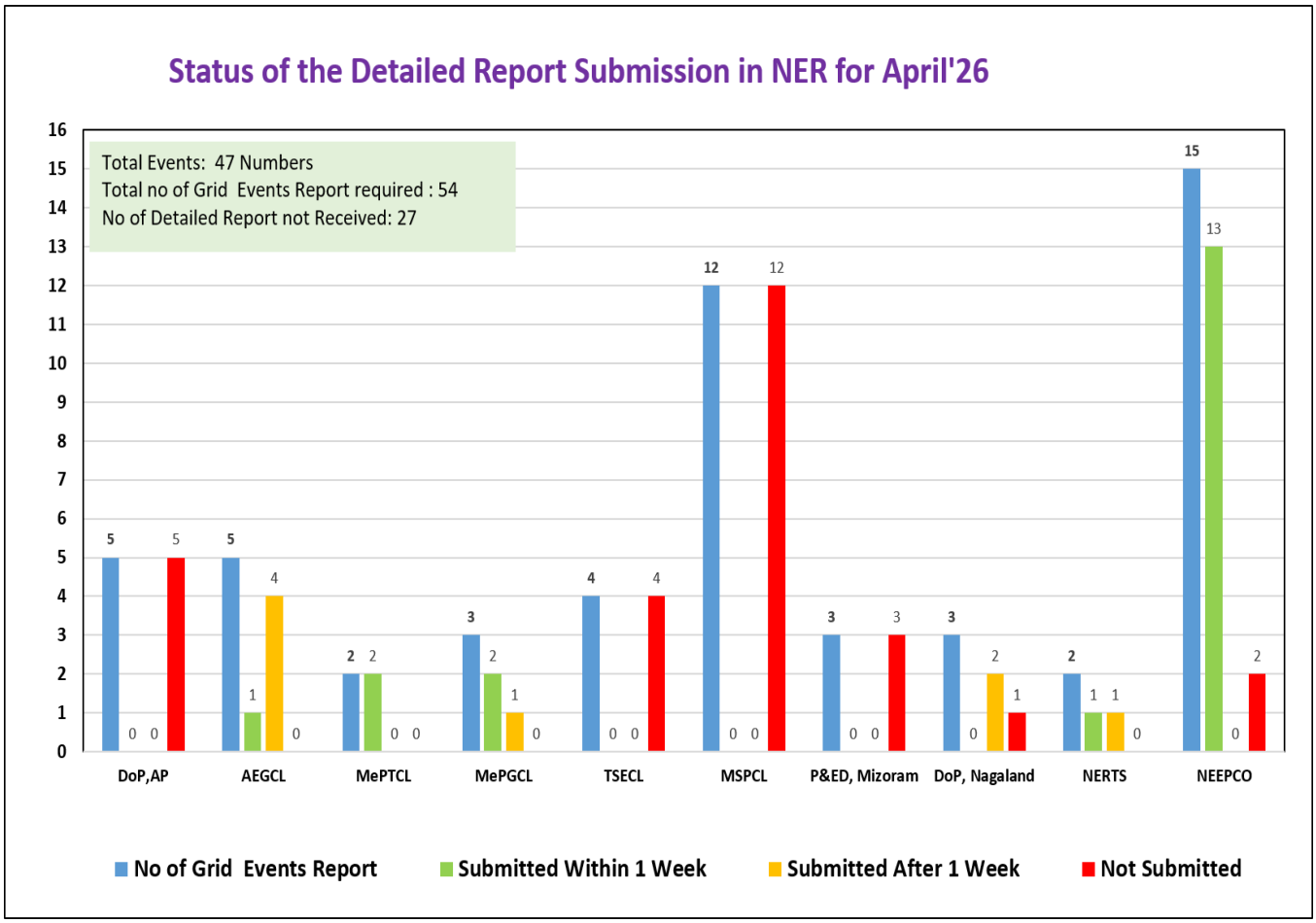

During Apr'26, detailed report of grid events not received from **DoP Arunachal Pradesh, TSECL, MSPCL & P&ED Mizoram.**

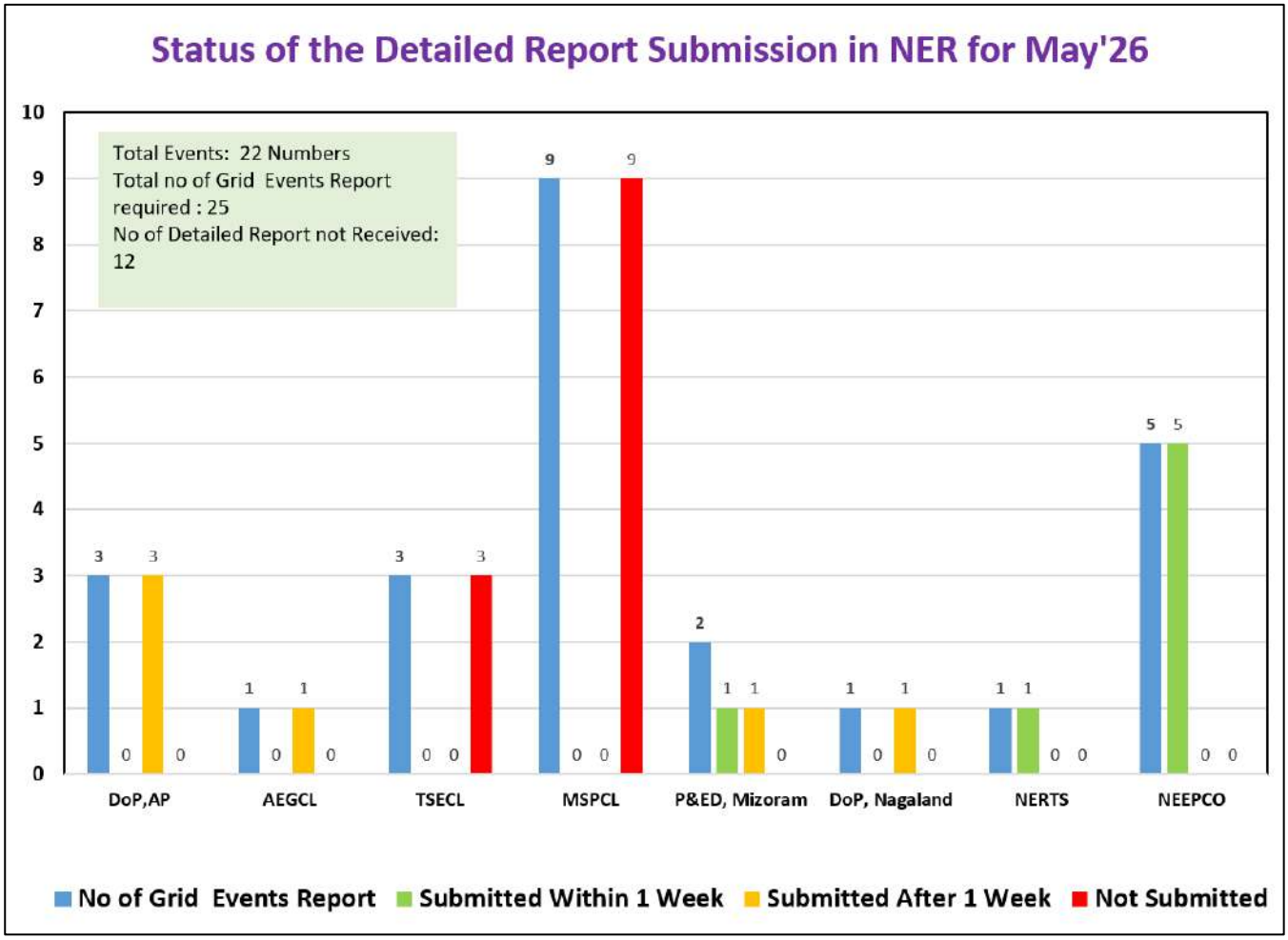

During May'26, detailed report of grid events not received from **TSECL & MSPCL.**

All the utilities are requested to promptly share all the necessary information such as FIR, DR, EL and Reports (Flash Report & Detailed Report) as per the specified timeline mention in the Grid Code-2023.

Members may discuss.

B.7 Submission of Protection Performance Indices by Transmission Utilities for Apr'26 & May'26:

As per Regulation No. 15(6), Protection Code - Users shall submit the following protection performance indices of previous month to their respective RPC and RLDC on monthly basis for 220 kV and above (132 kV and above in NER) system by 12th of every month for previous month indices, which shall be reviewed by the RPC.

The submission status as on **15th June'2026** as tabulated below:

	Name of Transmiss	D=	S=	R=	Remarks

Sl. No.	ion Licensee	(Nc/Nc+Nf)		(Nc/Nc+Nu)		(Nc/Nc+Ni)		
		Apr'26	May'26	Apr'26	May'26	Apr'26	May'26	
1	NETC	-	-	-	-	-	-	Submitted (No bay owned by NETC)
2	MUML	-	1	-	1	-	1	Submitted (No tripping during Apr'26)
3	NBTL	0.667	-	1	-	0.667	-	Failed AR operation at Bongaigaon & Nangalbibra end on 18th April & 20th April 2026. No tripping during May'26
4	NTL	Not submitted	1	Not submitted	1	Not submitted	1	
5	KMTL	-	1	-	1	-	1	Submitted (No tripping during Apr'26)
6	POWERGRID	1	1	1	1	1	1	
7	MePTCL	1	1	0.88	1	0.88	1	1.Unwanted tripping of 132 kV Khliehriat(ME)-Khliehriat(PG) II line from Khliehriat(ME) end 2.Unwanted tripping of 132

								kV Ampati-Phulbari II line from Ampati end
8	TPTL	Not submitted		Not submitted		Not submitted		
9	DoP Nagaland	1	1	1	1	1	1	
10	DoP Arunachal Pradesh	Not submitted	0.923	Not submitted	1	Not submitted	0.923	
11	AEGCL	Not submitted	Not submitted	Not submitted	Not submitted	Not submitted	Not submitted	
12	Mizoram	0.98	1	1	1	0.98	1	Failed tripping of 132 kV Zuangtui - Serchhip line on 5th April 26
13	MSPCL	**Not Submitted**						

Sl. No.	**Name of Generating Company**	**D=**		**S=**		**R=**		**Remarks**
		(Nc/Nc+Nf)		**(Nc/Nc+Nu)**		**(Nc/Nc+Ni)**		
		Apr'26	May '26	Apr' 26	May'26	Apr'26	May '26	
1	NTPC(Bgtpp)	Not submitted	-	Not submitted	-	Not submitted	-	No tripping during May'26
2	OTPC(Palatana)	1		1		1		
3	MePGCL	1	1	0.923	1	0.923	1	Unwanted Tripping of 132 kV Umtru - New Umtru Line on 21st and 29th April from New Umtru end

4	TPGCL	Not submitted	Not submitted	Not submitted	Not submitted	Not submitted	Not submitted	
5	NHPC (Loktak)	1	1	1	1	1	1	
5	NHPC (Subansiri)	**Not submitted**						
6	Kameng	1	1	1	1	1	1	
7	Panyor	1	-	1	-	1	-	No tripping during May'26
8	Pare	1	1	1	1	1	1	
9	Kopili	1	1	0.5	0.167	0.5	0.167	Unwanted Tripping of 220 kV Kopili-Misa line 3 from Misa end due to DT received. Unwanted DT send from Kopili end due to faulty BCU. Similar event during 10th, 11th & 28th May'26
10	Khandong	1	1	1	1	1	1	
11	Doyang	1	1	1	1	1	1	
12	AGBPP	1	1	1	0.8	1	0.8	
13	AGTCCPP	1	1	1	1	1	1	
14	Monarchak	1	1	1	1	1	1	
15	Tuirial	-	1	-	1	-	1	Submitted for April'26 (no tripping)

Therefore, all Users are requested to furnish and ensure performance indices (Dependability-D, Security-S, Reliability-R) with regards to the tripping of elements to NERPC & NERLDC positively by **12th** of every month for previous month indices in compliance with IEGC.

Members may discuss.

B.8 Maloperation of SPS related to outage/tripping of 220 kV Balipara-Sonabil D/C lines and GD in Sonabil and radially connected areas of Assam on 1st June'26:

Event 1: At 08:52 hrs of 01-06-2026, SPS Criteria-II related to outage/tripping of 220 kV Balipara - Sonabil D/C lines mal-operated during the planned shutdown of 220 kV Balipara - Sonabil I. Load loss of around 40-50 MW occurred in Assam power system.

Event 2: At 15:45 Hrs of 01-06-2026, SPS Criteria-1 operated due to high loading in 220 kV Balipara Sonabil II line (approximately 224 MW / 630 A) at Sonabil, resulting in the opening of 220 kV Sonabil –Samaguri D/C lines which was as per the SPS logic.

However, at the same time, 220 kV Balipara-Sonabil II line also tripped at Sonabil end, leading to a complete blackout of Sonabil and radially connected areas of Assam. Load loss of around 70 MW was observed. Prior to the event, 220 kV Balipara-Sonabil I line was under planned shutdown.

As per PMU data at NERLDC, no fault was observed in the system at 15:45 Hrs of 01-06 2026.

Therefore, tripping of 220 kV Balipara-Sonabil II line during SPS operation appears to be unwarranted.

As per Detailed report submitted by AEGCL,

At 08:52 Hrs, it was observed that the indications for **CB R-Phase Closed**, **CB Y-Phase Closed**, and **CB B-Phase Closed** changed to "OFF" at 08:52:18.088 hrs. This indicates a loss of DC supply to the circuit breaker indication circuit, resulting in the disappearance of the closed status indications for 220 kV Balipara- Sonabil line-2 at Sonabil resulted into the SPS Criteria II operation.

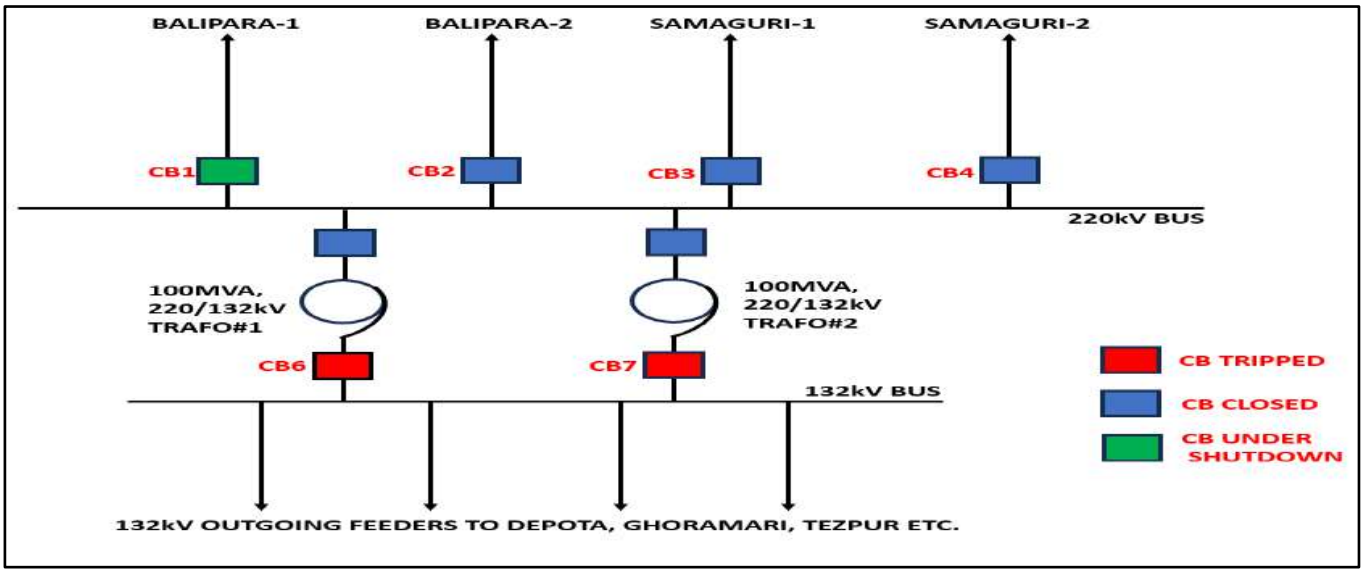

Again at 15:45 Hrs, the 220kV Sonabil – Balipara Line 2 was overloaded (crossed 630A) and SPS Triggering Criteria-1 was operated thus tripping the 220kV Sonabil – Samaguri Line I & II (CB3 and CB4).

It was observed that after operation of SPS Triggering Criteria-1, the "**RELAY TRIP 3PH**" was found HIGH which initiated the tripping of Master Trip relay for Balipara Line-II. The relay overlapped the SPS with a protection function.

The tripping of 220kV Sonabil – Balipara Line II initiated the operation of SPS Triggering Criteria-II (Both circuits out of service) and hence, the LV CB's of the transformers were tripped (CB6 & CB7) hence, the LV CB's of the transformers were tripped (CB6 & CB7)

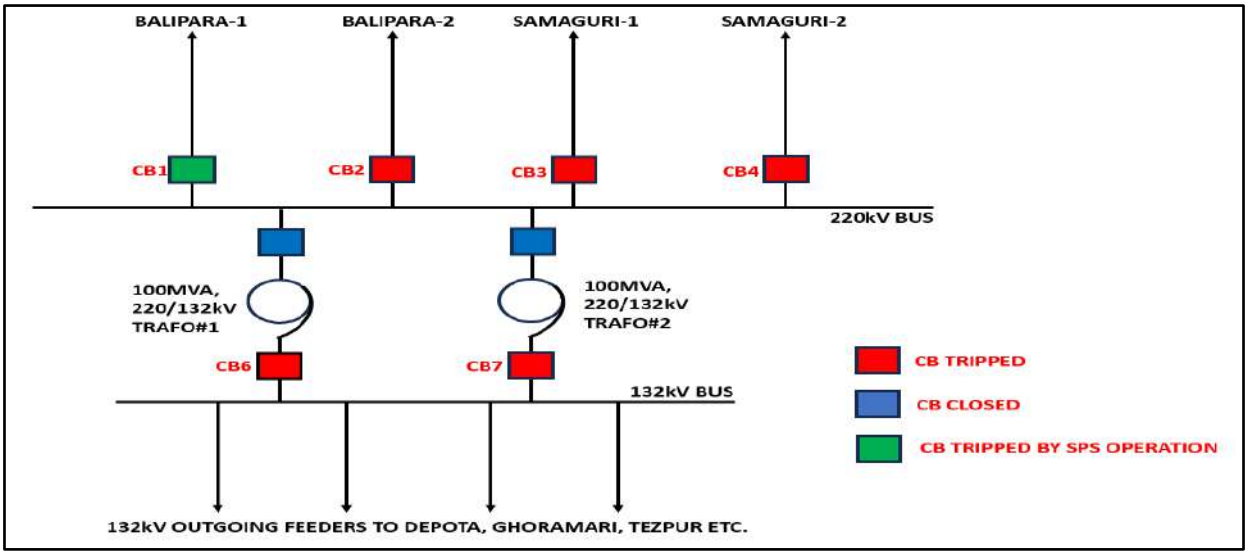

<u>Remedial measures taken:</u>

The SPS logic was upgraded, implemented and tested successfully on 9th and 10th of June, 2026 at 220kV Sonabil GSS. The above SPS operations took place during the event not due to issue with the SPS logic but due to other overlapping factors (missed DC supply, Overloading, transient overloading by traction which overlapped the SPS logic with protection function). Presently, the upgraded logic is immune to all the above factors.

Members may discuss.

B.9 <u>Non-operation of SPS scheme related to tripping of 132 kV Palatana-Surajmaninagar Line on 28-04-2026:</u>

At 09:28 Hrs of 28-04-2026, during tripping of 132 kV Palatana-Surajmaninagar Line, SPS related to tripping of 132 kV Palatana-Surajmaninagar Line failed to operate.

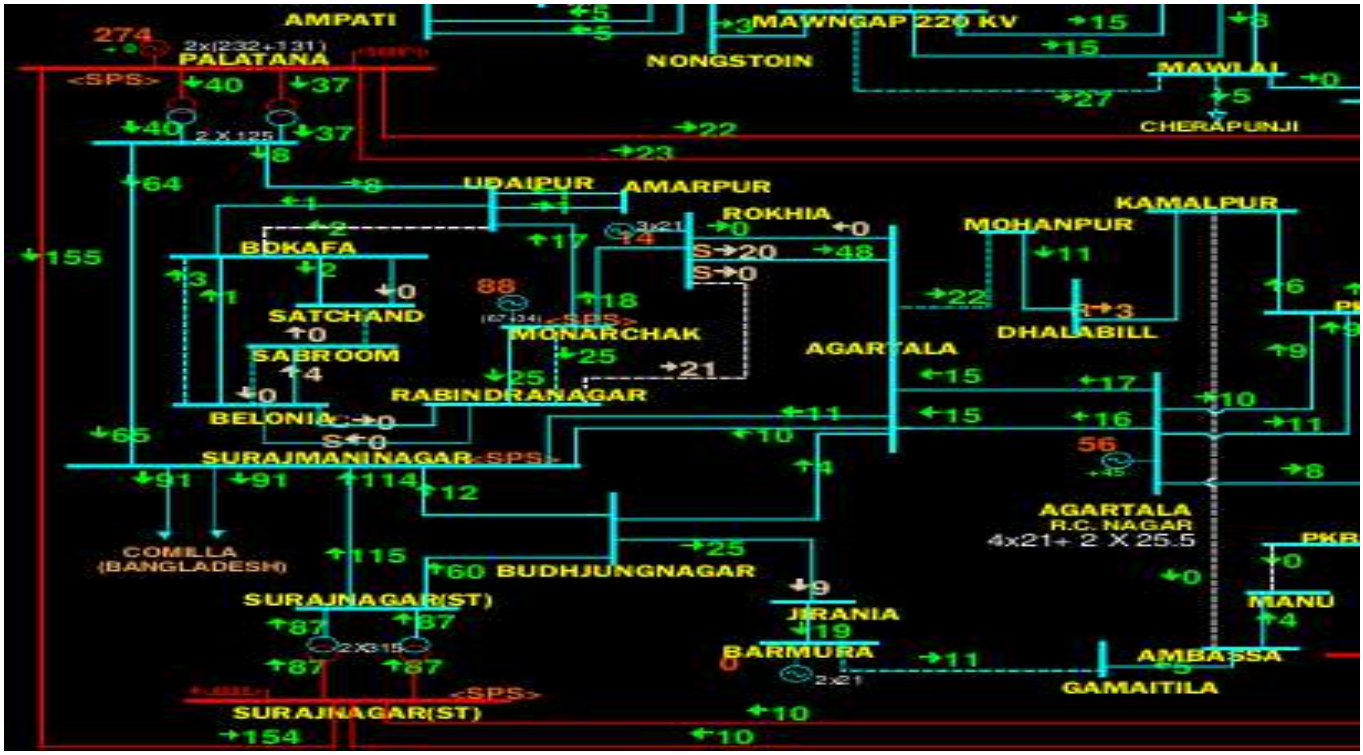

As per the details received from OTPC dated 29-04-2026, SPS operation was observed at OTPC during the tripping of the 132 kV Palatana–Surajmaninagar line, and the same has been recorded in the relay DR and SCADA SOE. Further, an increase in PLCC counter readings was also recorded at Palatana.

In this regard, NERTS is requested to kindly share the findings of the testing carried out, particularly with respect to the non-tripping of the 132 kV Surajmaninagar–Comilla D/C lines despite SPS operation.

NERTS is also requested to confirm the present healthiness status of the associated communication channels of the SPS scheme.

Members may discuss.

B.10 <u>Proposal for SPS for the 220 kV BTPS–Agia D/C Corridor:</u>

Due to delays in the commissioning of the upcoming 400 kV Sonapur and 400 kV Rangia substations in Assam, high loading is expected on the following transmission corridors:

- 400 kV Bongaigaon–Azara line
- 220 kV BTPS–Agia D/C
- 220 kV Balipara-Sonabil DC

System studies indicate that during periods of high demand in the North Eastern Region, particularly in the Assam power system, the combined loading of 400 kV Bongaigaon-Azara line and 220 kV BTPS-Agia DC may exceed 600 MW for longer duration.

Under such operating conditions, tripping of the 400 kV Bongaigaon–Azara line may result in critical loading of approximately 190 MW on each circuit of the 220 kV Agia–BTPS D/C line. Subsequent tripping of the 220 kV Agia–BTPS D/C line may lead to cascading outages in the Assam power system and may results into grid disturbances in both the Capital Region and the BTPS–Rangia area of the Assam power system.

To minimise the impact of the above contingency, a meeting was held on 29.05.2026 at the SLDC Assam office with officials from NERLDC, SLDC Assam, and AEGCL to deliberate on the implementation of a new System Protection Scheme (SPS) in the NER power system. The proposed SPS envisages automatic disconnection of approximately 45 MW of load at Agia and nearby substations whenever the loading on the 220 kV BTPS–Agia D/C line exceeds 500 A. This scheme is intended to prevent overloading of the corridor and avoid the possibility of cascading outages

during contingency conditions. The minutes of the meeting are enclosed as **Annexure-I.**

However, considering the criticality of the issue elaborated above, the SPS should only be viewed as an interim mitigation measure. As a long-term solution to ensure reliable and secure operation of the Assam power system, Assam is requested to accord priority to the strengthening of the 220 kV Agia–BTPS D/C line and expedite its implementation.

Members may discuss.

B.11 <u>Disabling of SPS related to "Secure evacuation of power from the Monarchak (NEEPCO) Power Plant":</u>

Recently, several elements have been commissioned in the Tripura Power System under the NERPSIP scheme, as listed below:

- 132 kV Udaipur – Bagafa D/C
- 132 kV Bagafa – Belonia D/C
- 132 kV Belonia – Sabroom S/C
- 132 kV Bagafa – Satchand S/C
- 132 kV Rabindranagar – Belonia D/C
- 132 kV Rabindranagar – Rokhia D/C (one circuit is currently charged)
- 132 kV Udaipur – Amarpur D/C

The status of the above elements was confirmed by SLDC Tripura during the meeting held on 12th May 2026. The minutes of the meeting are attached as **Annexure II**.

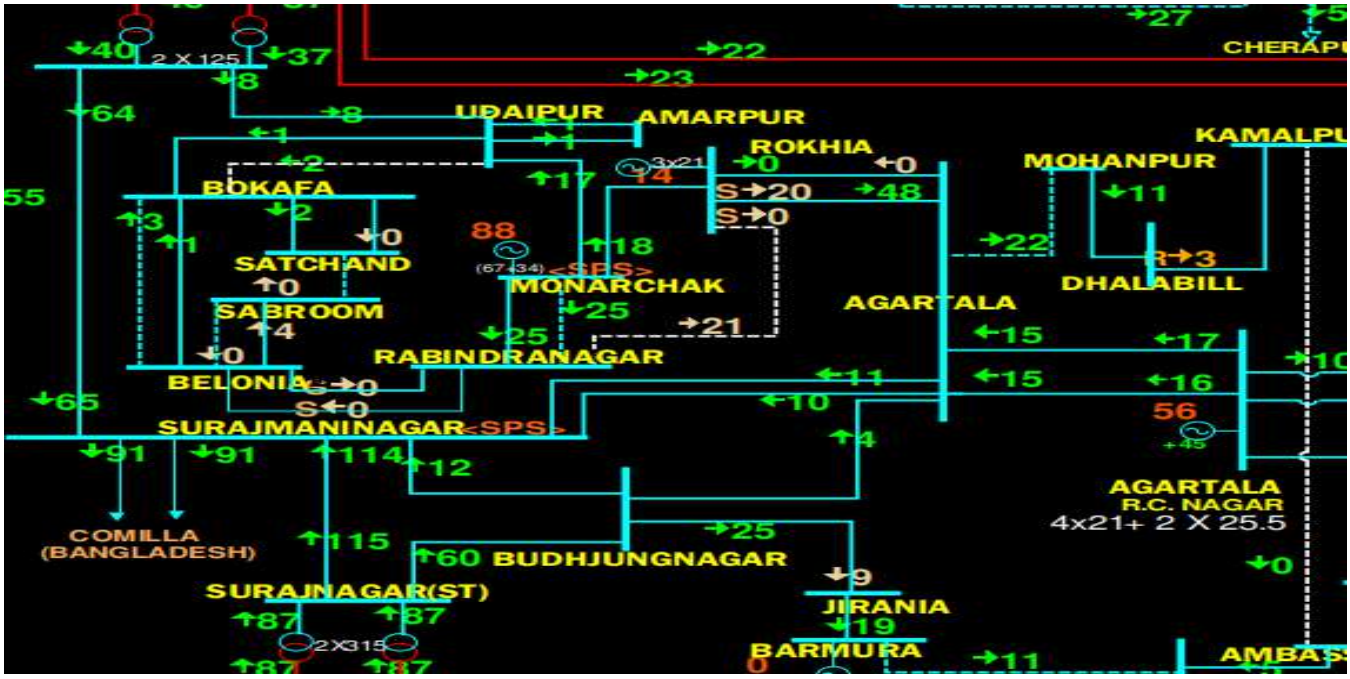

With the commissioning of these elements, power from the Monarchak (NEEPCO) Power Plant can now be evacuated safely. Accordingly, the SPS implemented for "Secure Evacuation of Power from Monarchak (NEEPCO) Power Plant" is no longer required.

In view of the above, NEEPCO is requested to permanently dismantle the SPS, in coordination with TPTL, at the earliest and confirm completion of the same.

Members may discuss.

B.12 Reporting of Operation & performance of SPS by the users and SLDCs as per IEGC:

As per Clause 16(3) of IEGC-23, the users and SLDCs shall report about the operation of SPS immediately and detailed report shall be submitted within three days of operation to the concerned RPC and RLDC in the format specified by the respective RPCs.

As per Clause 16(4) of IEGC-23, the performance of SPS shall be assessed as per the protection performance indices specified in these Regulations. In case, the SPS fails to operate, the concerned User shall take corrective actions and submit a detailed report on the corrective actions taken to the concerned RPC within a fortnight.

In view of the above, NERLDC has prepared a format for reporting of operation and performance of SPS attached as **Annexure III**.

Therefore, all the utilities are requested to submit report of operation of any SPS scheme within 3 days of operation and report on protection performance indices of SPS within a fortnight to RPC & RLDC in line with IEGC-23 in the attached format.

Members may discuss.

B.13 Decommissioning of the SPS at SM Nagar (TPTL):

In 89th PCC meeting, it was discussed that the SPS scheme (No: SPS/TR/005) for overloading of the 132 kV Surajmaninagar (TPTL) – Surajmaninagar (NTL) line, needs to be decommissioned by TPTL as the objective of the SPS scheme has been

fulfilled after successful implementation of CTR of 800:1 at the Surajmaninagar (TPTL) end.

Further to the above, TPTL has informed, through its email dated 15.06.2026, that the decommissioning work was completed on 12.06.2026. Accordingly, the SPS at SM Nagar (TPTL) stands successfully decommissioned.

Placed for information of the forum

B.14 Grid Disturbances at Lower Subansiri HEP on 12th and 13th June 2026:

On 12th June 2026 and 13th June 2026 total black out occurred at Lower Subansiri HEP with tripping of all the running units and all the evacuating lines. The details of the above events are appended below.

Event -1 On 12th June 2026 at Lower Subansiri HEP:

At 18:59 hrs on 12th June 2026, Unit-3 tripped due to tripping of its Unit Auxiliary Transformer (UAT). Subsequently, at 19:45 hrs on 12th June 2026, Unit-1 and Unit-2, along with the associated evacuation lines, namely 400 kV Subansiri–Biswanath Chariali Ckt-3 and Ckt-4, tripped, resulting in Grid Disturbance and total black out at the Lower Subansiri HEP with generation loss of 694 MW. Prior to the above event Unit-4 at Lower Subansiri was under forced outage.

Sl No.	Element Name	Outage time	Revival Time	Reason	Remarks
1	Subansiri Lower HEP - UNIT 3	12-06-2026 18:59	-	Due to the tripping of UAT	Generation loss of 230 MW
2	400KV-BISWANATH CHARIALI-SUBANSIRI-3	12-06-2026 19:45	12-06-2026 20:55	Auxiliary supply failure at Subansiri & No tripping at Biswanath	Tripping of all the elements resulted into GD at Lower Subansiri with generation loss of 464 MW (Unit 1 &
3	400KV-BISWANATH	12-06-2026 19:45	12-06-2026 21:46		

	CHARIALI-SUBANSIRI-4			Chariali for Line-3 and DT received for line-4	2); Total loss of Generation: 694 MW
4	Subansiri Lower HEP - UNIT 1	12-06-2026 19:45	12-06-2026 21:32	Auxiliary supply failure at Subansiri	
5	Subansiri Lower HEP - UNIT 2	12-06-2026 19:45	12-06-2026 21:14		

Event -2 On 13th June 2026 at Lower Subansiri HEP:

Again, on 13th June 2026 at 11:41 hrs, Unit-1 and Unit-2, along with 400 kV Lower Subansiri–Biswanath Chariali Ckt-3 and Ckt-4, tripped, resulting Grid Disturbance and total black out at the Lower Subansiri HEP with generation loss of 465 MW. Prior to the above event Unit-4 and Unit-3 at Lower Subansiri was under forced outage.

Sl No.	Element Name	Outage time	Revival Time	Reason	Remarks
1	400KV-BISWANATH CHARIALI-SUBANSIRI-3	13-06-2026 11:41	13-06-2026 12:35	GIS breakers tripped due to unhealthy GIS controller at Subansiri; No tripping at Biswanath Chariali for Line-3	Tripping of all the elements resulted into GD at Lower Subansiri with generation loss of 465 MW (Unit 1 & 2)
2	400KV-BISWANATH CHARIALI-SUBANSIRI-4	13-06-2026 11:41	13-06-2026 12:47		

3	Subansiri Lower HEP - UNIT 1	13-06-2026 11:41	13-06-2026 12:46	GIS breakers tripped due to unhealthy GIS controller at Subansiri	
4	Subansiri Lower HEP - UNIT 2	13-06-2026 11:41	13-06-2026 12:43		

Action Required from Lower Subansiri HEP (NHPC):

1. Identify the root cause and report implement remedial measures to prevent recurrence of similar total blackout incidents.
2. Submit a detailed report for the Grid Events.
3. Expedite restoration of Unit-4, which has been under forced outage since 12.05.2026.
4. Expedite restoration of 400 kV, 80 MVAR Bus Reactor-1, which has been under forced outage since 20.05.2026.

Members may discuss.

B.15 <u>Frequent unwanted tripping of 400/132 kV Kameng ICT:</u>

400/132 kV Kameng ICT tripped multiple times since Apr'2026 causing grid disturbance in Khupi & Seppa areas of Arunachal Pradesh which is a matter of serious concern.

The details of the events are shown below:

Event 1: At 15:38 Hrs of 22nd April'26

Sl. No.	Element Name	Tripping Time	Relay Indication A	Relay Indication B	Analysis based on FIR/DR/EL
1	132 kV Tenga-Khupi Line	22-04-2026 15:38	DP, ZII, Y-N	Distance protection optd	Y-N fault (Iy-1.3 kA, In-1.3 kA) in 132 kV Tenga-Khupi Line initiated at 15:28:46.495 Hrs and cleared within 432 msec

2	3X40 MVA, 400/132 kV ICT at Kameng	22-04-2026 15:38	E/F Stg-2 in HV side operated within 69 msec	from Tenga end on operation of DP, ZII. Distance protection operated at Khupi end. At 15:29:03.515 Hrs, Kameng ICT tripped on E/F Stg-II within 69 msec

Event 2: At 09:57 Hrs of 30th April'26

Sl. No.	Element Name	Tripping Time	Relay Indication A	Relay Indication B	Analysis based on FIR/DR/EL
1	132 kV Khupi-Seppa Line	30-04-2026 09:57	E/F	No tripping (radial)	As per information from DoP Arunachal Pradesh, 132 kV Khupi-Seppa line tripped on E/F from Khupi end. At 09:57 Hrs, Kameng ICT tripped on E/F Stg-I within 3.5 sec
2	3X40 MVA, 400/132 kV ICT at Kameng	30-04-2026 09:57	E/F Stg-1 in HV side operated		

Event 3: At 17:24 Hrs of 10th May'26

Sl. No.	Element Name	Tripping Time	Relay Indication A	Relay Indication B	Analysis based on FIR/DR/EL
1	132 kV Tenga-Khupi Line	10-05-2026 09:57	Auto Recloser successful from both ends		R-N fault (Ir-2.7 kA, In-2.8 kA) initiated at 17:23:08.367 hrs which was cleared within 73 msec from Khupi end on operation of DP, ZI. Fault cleared within 142 msec from Tenga end on DP, ZI. AR operated
2	3X40 MVA, 400/132 kV ICT at Kameng	10-05-2026 09:57	E/F Stg-2 in HV side operated within 76 msec		

				successfully after 1.6 sec from both ends. At 17:23:04.470 Hrs, Kameng ICT tripped on E/F Stg-II within 76 msec.

Event 4: At 13:38 Hrs of 21st May'26

Sl. No.	Element Name	Tripping Time	Relay Indication A	Relay Indication B	Analysis based on FIR/DR/EL
1	132 kV Tenga-Khupi Line	21-05-2026 13:38	DP, ZI, R-N, AR unsuccessful	DP, ZI, R-N, AR unsuccessful	R-N fault (Ir-1.5 kA, In-1.4 kA) initiated at 13:38:15.107 Hrs which was cleared within 81 msec from Tenga end on operation of DP, ZI. After around 1.5 sec, AR attempted however tripped on reclose. Fault cleared within 71 msec from Khupi end on operation of DP, ZI, AR attempted after 1 sec, however tripped during reclaim time. At 13:38:18.187 Hrs, Kameng ICT tripped on E/F Stg-II within 70 msec.
2	3X40 MVA, 400/132 kV ICT at Kameng	21-05-2026 13:38	E/F Stg-2 in HV side operated within 70 msec		

It has been observed that HV side E/F operation of Kameng ICT seems to be correct as per the setting of 200*8 =1600 A with time delay of 50 msecs. However, high current value of around 2.5-2.9 kA observed in 400 kV Star connected end of Kameng ICT.

The event discussed during the GD discussion online meeting held on 12th June 2026 as follows: -

The 400/132 kV ICT is an autotransformer having common neutral for the 400 kV and 132 kV windings. During an earth fault in the 132 kV system, neutral current may return through the common neutral of the ICT. Accordingly, where the E/F protection derives current input from the neutral bushing CT (ratio: 200/1 A), the relay may record the neutral current corresponding to the 132 kV-side earth fault. Hence, the forum suggested NEEPCO to take the Backup OC & EF relay settings using the inputs from the Bay CT's at the HV side (CTR: 500/1) to avoid such unwanted EF Highset operation.

Hence, NEEPCO is requested to take necessary corrective measures on the above-mentioned issues to prevent further occurrences.

Members may discuss.

B.16 <u>Frequent Grid disturbance in Karong & Gamphajol area of Manipur power system and CB issue at Karong & Gamphajol S/S:</u>

Gamphajol & Karong areas of Manipur power is connected with rest of the grid through 132 kV Yurembam-Gamphajol line, 132 kV Gamphajol-Karong line & 132 kV Karong-Kohima line.

During Jan'26 to June'26 (till date), 8 no. of GD occurred in Gamphajol & Karong areas due to tripping of 132 kV Yurembam-Gamphajol line, 132 kV Gamphajol-Karong line & 132 kV Karong-Kohima line.

The details of tripping are tabulated below:

SL No.	Element Name	Owner	Tripping Date & Time	Restoration Date & Time	Outage Duration	Relay_Send	Relay_Rend	GD affected areas	Load loss
1	132 kV Gamphajol -Karong Line	MSPCL	15-03-2026 20:52	16-03-2026 13:18	16:26:00	DP, ZI, B-N, 5.2 Km	No tripping, likely CB not open	Karong	3
2	132 kV Kohima-Karong Line	MSPCL & DoP Nagaland	15-03-2026 20:52	15-03-2026 22:05	01:13:00	DP, ZIII, B-N	No tripping		
3	132 kV Imphal (MSPCL) - Gamphajol Line	MSPCL	17-03-2026 16:13	18-03-2026 14:09	21:56:00	DP, ZI, B-E,FD: 2.6 km,9.3kA (Jumper snapped)	DP, ZI (radial)	Karong, Gamphajol areas of Manipur & Kohima, Meluri, Zhadima, Chiephebozou areas of Nagaland	33
4	132 kV Gamphajol -Karong Line	MSPCL	22-03-2026 00:48	22-03-2026 15:56	15:08:00	EF	OC	Gamphajol	2
5	132 kV Imphal (MSPCL) -	MSPCL	22-03-2026 00:48	31-03-2026 19:01	9.18:13:00	OC (CB openi	EF		

SL No.	Element Name	Owner	Tripping Date & Time	Restoration Date & Time	Outage Duration	Relay_Sending mechanism faulty)	Relay_Rend	GD affected areas	Load loss
	Gamphajol Line								
6	132 kV Gamphajol -Karong Line	MSPCL	06-04-2026 11:02	06-04-2026 14:10	03:08:00	Overcurrent, 1 km	Overcurrent, 22.54 km	-	-
7	132 kV Gamphajol -Karong Line	MSPCL	10-04-2026 08:22	10-04-2026 15:15	06:53:00	No tripping	DP, ZIII, 54.55 km	Gamphajol and Karong	5
8	132 kV Imphal (MSPCL) - Gamphajol Line	MSPCL	10-04-2026 08:22	10-04-2026 15:17	06:55:00	DP, ZI, B-N, 4.4 Km	DP, ZI, B-N, 7.2 Km, likely CB not open		
9	132 kV Kohima-Karong Line	MSPCL & DoP Nagaland	10-04-2026 08:22	10-04-2026 09:04	00:42:00	DP, ZIII	No tripping		
10	132 kV Imphal (MSPCL) - Gamphajol Line	MSPCL	01-05-2026 13:44	03-05-2026 14:50	2.01:06:00	DP, ZI, B-N, 6.5 Km	DP, ZI, 17.2 Km	Gamphajol	20

SL No.	Element Name	Owner	Tripping Date & Time	Restoration Date & Time	Outage Duration	Relay_Send	Relay_Rend	GD affected areas	Load loss
11	132 kV Gamphajol -Karong Line	MSPCL	01-05-2026 13:44	01-05-2026 15:00	01:16:00	No tripping	I>4 trip, R-N (DP, ZIII started)		
12	132 kV Gamphajol -Karong Line	MSPCL	11-05-2026 11:25	26-05-2026 17:39	15.25972222	awaited	Z1, E/F, O/C, 18.01km	-	-
13	132 kV Kohima-Karong Line	MSPCL & DoP Nagaland	11-05-2026 16:55	11-05-2026 18:15	01:20:00	DP, ZI, R-Y-B	DP, ZI, 3.471 Km	Karong	13
14	132 kV Imphal (MSPCL) - Gamphajol Line	MSPCL	26-05-2026 17:41	28-05-2026 08:12	1.14:31:00	E/F, 17.2 km	Z-III, 35.7km, Iy=2.15 kA	-	-
15	132 kV Gamphajol -Karong Line	MSPCL	01-06-2026 21:22	02-06-2026 13:39	16:17:00	No Tripping	DP, ZIII, 40.73 Km	Gamphajol	9
16	132 kV Imphal (MSPCL) - Gamphajol Line	MSPCL	01-06-2026 21:22	02-06-2026 13:38	16:16:00	DP, ZI, B-N, 2.516 kA	No Tripping, Likely CB not open		

SL No.	Element Name	Owner	Tripping Date & Time	Restoration Date & Time	Outage Duration	Relay_Send	Relay_Rend	GD affected areas	Load loss
17	132 kV Imphal (MSPCL) - Gamphajol Line	MSPCL	10-06-2026 09:41	10-06-2026 11:34	01:53:00	Z-3, R-ph, 51.49 km	No tripping	Gamphajol	2
18	132 kV Gamphajol -Karong Line	MSPCL	10-06-2026 09:41	Not yet revived (as on 15.06.2026)	-	No tripping, likely CB not open	Z-1, 4.03 kms		

Observations:

- 132 kV Imphal-Gamphajol line tripped 7 number times & 132 kV Gamphajol-Karong tripped 8 number of times during Jan'26 to June'26.
- Due to the above tripping, a total of four (04) grid disturbance occurred in Karong area and six (06) grid disturbance occurred in Gamphajol area of Manipur power system.
- Protection system of Gamphajol fails to isolate the fault resulting in clearing of fault by tripping of healthy lines on ZIII from remote ends.
- Highset OC setting was found enabled at Karong end for 132 kV Gamphajol line which is likely causing early tripping of CB at Karong.

The issue of repeated grid disturbances at Gamphajol & Karong Substation likely due to CB issue at Gamphajol has been informed to MSPCL vide NERLDC letter dated 12-05-2026 attached as **Annexure IV.** However, no corrective action has been implemented till date, resulting in repeated grid disturbances in the Gamphajol area of Manipur power system.

Action points for MSPCL:

- Share root cause of such repeated tripping.

- Check the circuit breaker and protection relays at Gamphajol for both 132 kV Yurembam-Gamphajol & 132 kV Gamphajol-Karong lines.
- Likely Relay coordination issue at Karong end of Gamphajol line which is causing early tripping from Karong end. I>4 setting with delay 50 msecs needs to be reviewed.
- Submit DR/EL data at Gamphajol end.

Members may discuss.

B.17 <u>Frequent tripping of 132 kV Loktak-Rengpang line and grid disturbance in Rengpang area of Manipur:</u>

Rengpang area of Manipur power system is connected to Loktak (NHPC) through 132 kV Loktak – Rengpang line due to the long outage of 132 kV Rengpang – Jiribam (MA) line.

During Jan'26 to June'26 (till 15-06-2026), 132 kV Loktak – Rengpang line tripped 27 number of times causing grid disturbance in Rengpang area of Manipur power system which is a matter of serious concern.

The details of tripping are listed below:

Sl. No.	Element Name	Owner	Tripping Date & Time	Relay_Loktak	Relay_Rengpang
1	132 kV Loktak - Rengpang Line	MSPCL	28-02-2026 11:16	DP, ZI, B-N, 2.5 kA, 14.34 Km, 81 msec	No tripping (radial)
2	132 kV Loktak - Rengpang Line	MSPCL	28-02-2026 12:11	DP, ZI, Y-N, 7.34 Km, 2.6 kA, 82 msec	No tripping (radial)
3	132 kV Loktak - Rengpang Line	MSPCL	13-03-2026 14:14	I>trip, Ir-467 A, Iy-453 A, Ib-433 A	No tripping (radial)
4	132 kV Loktak - Rengpang Line	MSPCL	15-03-2026 01:18	DP, ZI, R-Y, 22.87 Km, 3.6 kA, 92 msec	No tripping (radial)

5	132 kV Loktak - Rengpang Line	MSPCL	28-03-2026 11:19	DP, ZI, B-N, 14.1 Km	No tripping (radial)
6	132 kV Loktak - Rengpang Line	MSPCL	02-04-2026 03:05	I>1 trip, B-N	No tripping (radial)
7	132 kV Loktak - Rengpang Line	MSPCL	08-04-2026 01:04	I>1 trip, B-N	No tripping (radial)
8	132 kV Loktak - Rengpang Line	MSPCL	15-04-2026 00:34	DP, Z1, 14.18km, B-ph, 2.253kA	No tripping (radial)
9	132 kV Loktak - Rengpang Line	MSPCL	21-04-2026 00:02	DP, ZI, B-N, 14.39 Km, 82 msec, 2.5 kA	No tripping (radial)
10	132 kV Loktak - Rengpang Line	MSPCL	21-04-2026 21:58	DP, Z1, B-N, 14.35 km, 69 msec, 2.6 kA	No tripping (radial)
11	132 kV Loktak - Rengpang Line	MSPCL	22-04-2026 07:34	DP, ZI, B-N, 14.53 km, 68 msec	No tripping (radial)
12	132 kV Loktak - Rengpang Line	MSPCL	26-04-2026 04:58	DP, ZI, B-N, 14.23 km, 66 msec, 2.3 kA	No tripping (radial)
13	132 kV Loktak - Rengpang Line	MSPCL	26-04-2026 18:36	DP, ZI, B-N, 14.6 km, 72 msec, 2.6 kA	No tripping (radial)
14	132 kV Loktak - Rengpang Line	MSPCL	27-04-2026 06:02	DP, ZI, B-N, 13.84 km, 79 msec, 2.2 kA	No tripping (radial)
15	132 kV Loktak - Rengpang Line	MSPCL	22-05-2026 13:17	DP, Z1, R-Y, 23.85 km, 75 msec, 3.4 kA	No tripping (radial)
16	132 kV Loktak - Rengpang Line	MSPCL	25-05-2026 14:42	DP, ZI, R-Y, 23.71 Km, 70 msec, 3.5 kA	No tripping (radial)

17	132 kV Loktak - Rengpang Line	MSPCL	26-05-2026 07:43	DP, ZI, R-Y, 23.4 Km, 3.4 kA, 63 msec	No tripping (radial)
18	132 kV Loktak - Rengpang Line	MSPCL	29-05-2026 10:21	DP, ZI, B-N, 8.8 Km, 3.2 kA, 82 msec	No tripping (radial)
19	132 kV Loktak - Rengpang Line	MSPCL	31-05-2026 09:20	DP, Z1, B-N, 9.36 km	No tripping (radial)
20	132 kV Loktak - Rengpang Line	MSPCL	01-06-2026 09:47	DP, ZI, B-N, 9.4 km, 70 msec, 3.2 kA	No tripping (radial)
21	132 kV Loktak - Rengpang Line	MSPCL	03-06-2026 12:40	DP, ZI, B-N, 2.8 kA	No tripping (radial)
22	132 kV Loktak - Rengpang Line	MSPCL	05-06-2026 10:19:00	DP, ZI, B-N, 3.18 kA, 9.21 km	No tripping (radial)
23	132 kV Loktak - Rengpang Line	MSPCL	08-06-2026 10:31:00	DP, ZI, B-N	No tripping (radial)
24	132 kV Loktak - Rengpang Line	MSPCL	11-06-2026 09:39:00	DP, ZI, B-N, 9.11 km, 3.11 kA	No tripping (radial)
25	132 kV Loktak - Rengpang Line	MSPCL	11-06-2026 12:52:00	DP, ZI, B-N, 9.09 km	No tripping (radial)
26	132 kV Loktak - Rengpang Line	MSPCL	12-06-2026 09:49:00	DP, ZI, 9.2 km, 3.192 kA	No tripping (radial)
27	132 kV Loktak - Rengpang Line	MSPCL	13-06-2026 15:53:00	DP, ZI, B-N, 8.77 km, 3.2 kA	No tripping (radial)

MSPCL had availed a shutdown of the 132 kV Loktak–Rengpang line on 4th and 5th June 2026 for line inspection and jungle cutting activities. However, tripping of the line has continued to occur even after the completion of the maintenance work. The issue of frequent tripping of the 132 kV Loktak–Rengpang line is being regularly discussed in the monthly PCC meetings. Despite repeated deliberations,

the underlying cause has not yet been identified and no effective corrective action appears to have been taken, resulting in continued disturbances on the line. Further, restoration of the 132 kV Jiribam (MA)–Rengpang line may be expedited to enhance system reliability and avoid grid disturbances in the Rengpang area of Manipur.

MSPCL is requested to provide an update on the reasons for the frequent tripping of the 132 kV Loktak–Rengpang line, along with the corrective measures being undertaken to resolve the issue.

Members may discuss.

B.18 <u>Grid Disturbance in Along, Basar, Daporijo and Ziro area of Arunachal Pradesh Power System on 18-05-2026:</u>

Ziro, Daporijo, Basar and Along areas of Arunachal Pradesh Power System were connected to the rest of the NER grid through 132kV Along-Pasighat line. 132 kV Panyor-Ziro line is under Planned shutdown since 10:00 Hrs of 11-05-2026 and above mentioned areas are radially connected with 132 kV Ziro-Daporijo-Basar-Along-Pasighat link only.

At 04:02 Hrs of 18-05-2026, 132 kV Along-Pasighat line tripped which resulted in blackout of Ziro, Daporijo, Basar and Along areas of Arunachal Pradesh. Load loss of 11 MW occurred.

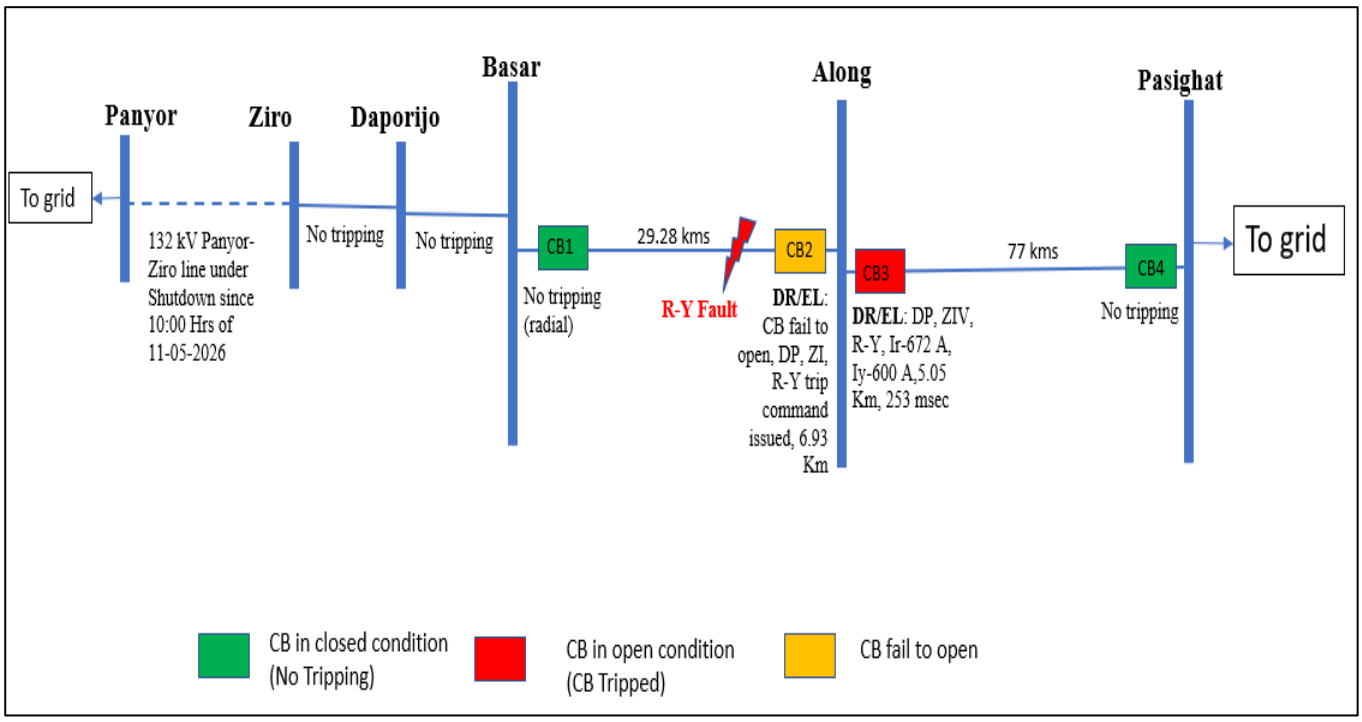

As per DR analysis, resistive R-Y fault (Ir-0.66 kA, Iy-0.60 kA) initiated at 04:05:51.590 hrs in 132 kV Basar-Along line. Fault detected in ZI from Along end and trip command was issued, however CB at Along failed to open. Consequently, fault was cleared by tripping of 132 kV Along-Pasighat line from Along end on operation of DP, ZIV within 253 msec.

Similar event occurred on 21-04-2026.

DoP Arunachal Pradesh to undertake necessary remedial measures to avoid recurrence of such events.

Members may discuss.

B.19 <u>Grid Disturbance in Mendipathar area of Meghalaya Power System on 4th June'2026:</u>

Mendipathar area of Meghalaya power system was connected with rest of the grid through 132 kV mendipathar-Nangalbibra & 132 kV Agia-Nangalbibra lines.

At 02:12 hrs of 04-06-2026, 132 kV 132 kV Agia-Mendipathar, 132 kV Mendipathar-Nangalbibra & 132 kV Agia-Nangalbibra Lines tripped leading to grid disturbance in Mendipathar area of Meghalaya power system. Load loss of 16 MW occurred.

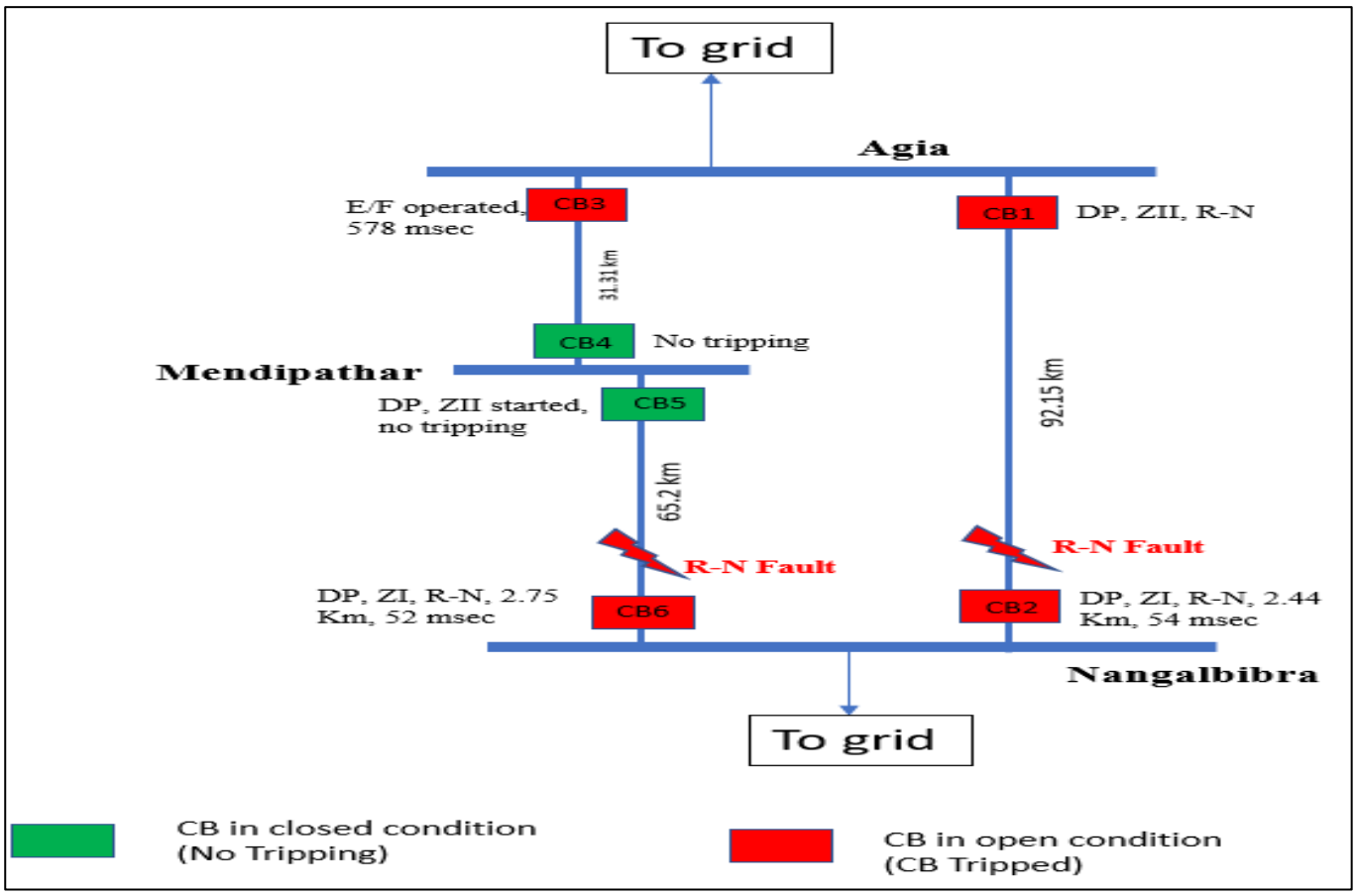

As per DR analysis, Solid R-N fault (Ir-1.2 kA, In-1.4 kA) appears to be in 132 kV Agia Nangalbibra line at a distance of 2.44 Km from Nangalbibra which was cleared from Nangalbibra end (CB2) on ZI within 54 msec. ZII operated at Agia end (CB1). There was a subsequent fault in 132 kV Nangalbibra-Mendipathar line which tripped on ZI at Nangalbibra end (CB6) with a fault distance of 2.75 Km. ZII/ZIII started at Mendipathar end (CB5), however, prior to clearing of fault from Mendipathar end (CB5), 132 kV Agia-Mendipathar line tripped on operation of Earth fault from Agia end (CB3) within 578 msec.

Root cause: Tripping occurred due to multiple lightning faults near Nangalbibra.

Action points for MePTCL:

- Backup E/F setting at Agia for 132 kV Mendipathar line (CB3) needs to be reviewed and coordinated with ZIII time delay as per NERPC Protection philosophy.
- ZII time delay at Mendipathar (CB5) for 132 kV Nangalbibra line needs to be reviewed and set as per protection philosophy.

Members may discuss.

B.20 <u>Grid disturbance in Pasighat area of Arunachal Pradesh on 3rd June'2026:</u>

Pasighat, Napit and Niglok areas of AP Power System were connected with rest of NER Grid through 132 kV Along-Pasighat and 132 kV Roing-Pasighat lines.

At 01:42 Hrs on 03-06-2026, 132 kV Along-Pasighat and 132 kV Roing-Pasighat lines tripped. Due to tripping of these elements, Pasighat, Napit and Niglok areas of AP Power System were isolated from NER Grid and collapsed due to no source available in this area. Load loss of 8 MW occurred.

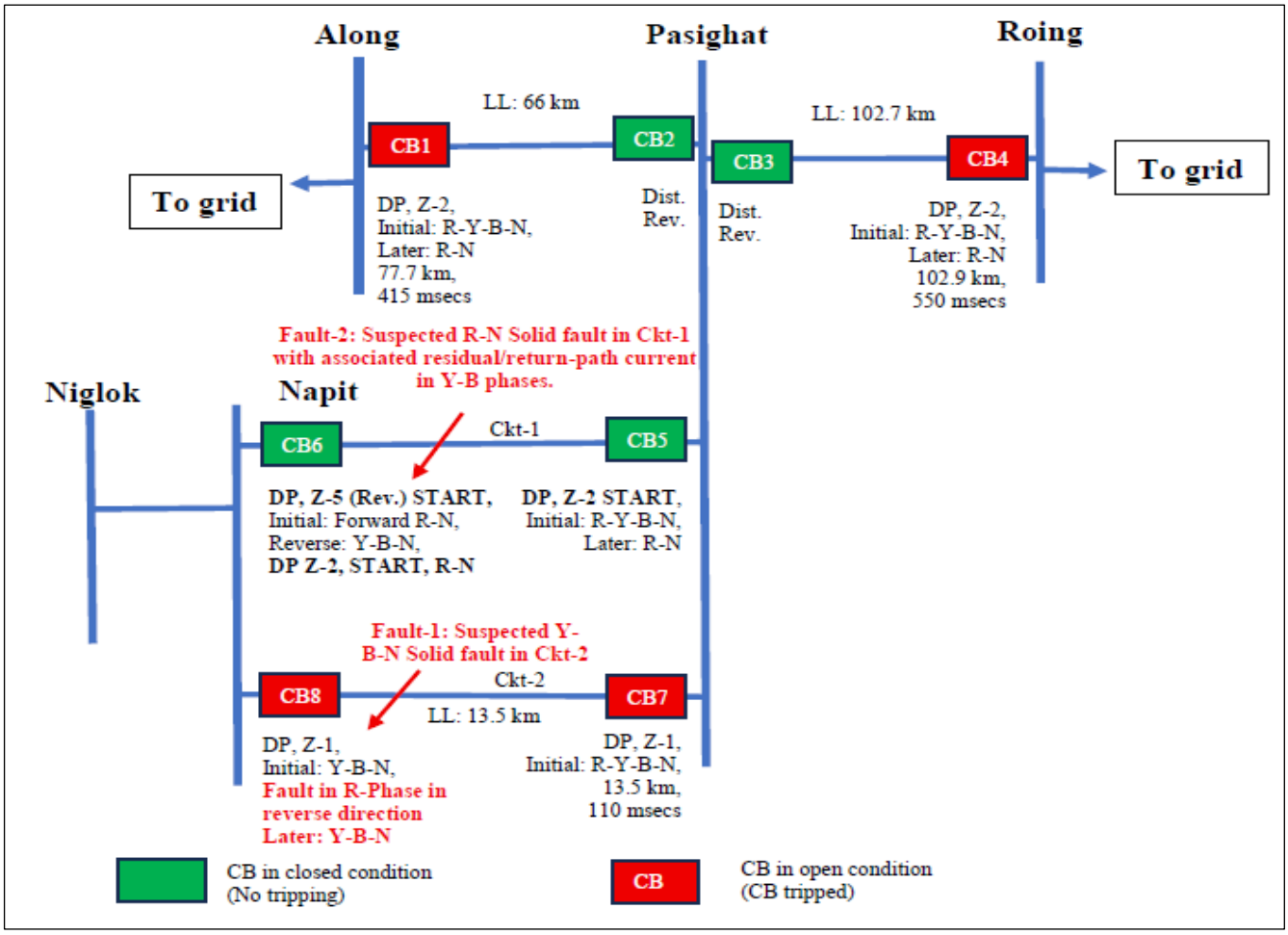

A three-phase-to-ground fault (R-Y-B-N) appears to have occurred in the system connected at Pasighat. The fault initially persisted as a multi-phase fault for approximately 170 msecs, after which it evolved into a predominantly R-phase-to-ground fault.

Fault was in 132 kV Pasighat-Napit lines which was cleared by Line-2 from both ends on Zone-1 operation. However, the fault was not cleared immediately from Pasighat end of line-1 due to which fault was feeding from 132 kV Along-Pasighat & 132 kV Roing-Pasighat lines. Consequently, 132 kV Along-Pasighat & 132 kV Roing-Pasighat lines tripped on ZII from Along & Roing end.

Action points for DoP Arunachal Pradesh:

- Delayed clearance of fault through 132 kV Pasighat-Napit Ckt-1 from Pasighat end was observed. Distance protection settings and scheme for 132 kV Pasighat-Napit I line needs to be reviewed.

- DR time drift needs to be rectified at Pasighat:

  Time drift of **7 min** at Pasighat end of 132 kV Pasighat-Napit Ckt-1 line

  Time drift of **9 min** at Pasighat end of 132 kV Pasighat-Napit Ckt-2 line

Members may discuss.

B.21 <u>Nonoperation of Autorecloser in 400 kV NETC owned lines during May & June'26:</u>

The list of the tripping events is tabulated below: -

Sl. No.	Name of Line Element	Tripping Date & Time	Revival Date & Time	Relay Indication		Remarks
				End A	End B	
1	400 kV Silchar-Palatana T/L (Ckt-II)	24-05-2026 04:32	24-05-2026 05:01	Silchar End: AFAS:M1: R-N, 60.762KM, 4.40KA, Zone-1 M2: R-N,60.979 KM, 4.35KA, Zone-1	Palatana End: DP, ZI, R-E, 180.2 KM, 1.436KA, 50 msecs	A/R Sucsessful at Silchar end but AR not attempted at Palatana end.
2	400 kV Silchar-Palatana T/L (Ckt-II)	03-06-2026 05:06	03-06-2026 05:46	Silchar End: AFAS:M1: R-,40.99KM, 7.22KA, Zone-1 M2: R-N,41.463 KM,7.4 KA, Zone-1	Palatana End: R-N, 205 KM, Zone-2, Carrier aided Tripping, 84 msecs	A/R Sucsessful at Silchar end but AR not attempted at Palatana end.

3	400 kV Silchar-Byrnihat T/L (Ckt-II)	24-05-2026 01:13	24-05-2026 04:14	Silchar End: AFAS:M1: B-N,18.696KM, 8.64KA, Zone-1 M2: B-N,18.886 KM,8.52KA, Zone-1; DT Received	Byrnihat End: DP, ZII, B-E, FD: 249.9 KM,1.8 kA Carrier aided Tripping, 86 msecs; DT Send	A/R Sucsessful at Silchar end but tripped on DT received but AR not attempted at Byrnihat end.

The nonoperation of Autorecloser in the above-mentioned lines are critical for the NER grid.

Hence, utilities are requested to take corrective action & as well ensure the healthiness of the at the lines.

Members may discuss.

C. FOLLOW–UP AGENDA ITEMS

C.1 Mapping of SPS in the SCADA Display for real time monitoring of all SPS:

(Ref: Agenda C.1 88th PCCM | 19th February 2026)

NLDC has submitted the Guidelines on "Interfacing Requirements" after stakeholder consultation for approval of the Commission as mentioned in the Regulation 7.4, read with Regulation 14.2 of the Communication System for inter-State transmission of electricity) Regulations,2017. On dated 19-Jan-2024, CERC approved the guideline on "Interfacing Requirements" prepared by NLDC in consultation with the stakeholder. As per the Guideline, real time telemetered is SPS Signal need to be monitored. The digital status shall be as per IEC standard. Digital Status for circuit breaker must be double point while isolator status can be either single point or double point as per end device. All users shall comply with interface requirements as specified and shall share interface details with respective Control Centre.

Sl. No.	Description	Analog Points	Digital Points	Protection Signal
1	SPS Signal		DIGITAL STATUS: Enable/Disable, Operated/No Operated (Condition/Logic Wise)	

Present Status of SPS mapping in SCADA Display

10-Apr-2026 17:54:24 SPS STATUS & NER

STATION	SPS	SPS ON/OFF	SPS OPTD.
BGTPP_NTPC	BGTPP U-3	ON	NRML
PALATANA_OTPC	SPS-2 Bangladesh	ON	NRML
	SPS-4 Bangladesh	ON	NRML
	SPS -2 HSR	OFF	NRML
	SPS -3 HSR	OFF	NRML
ZIRO_PG	ZIRO SPS	OFF	NRML
SARUSAJAI_AS	SARUSAJAI SPS	F OFF	F NRML
IMPHAL_PG	IMPHAL SPS	OFF	NRML
SM NAGAR (ST)	SM NAGAR B/R -1 SPS	ON	NRML
SM NAGAR (ST)	SM NAGAR B/R -2 SPS	ON	NRML
PK BARI (ST)	PK BARI B/R -1 SPS	ON	NRML
PK BARI (ST)	PK BARI B/R -2 SPS	ON	NRML
TINSUKIA (AS)	TINSUKIA SPS	OFF	NRML
BONGA_AS	SPS Stage -1	ON	NRML
	SPS Stage -2		NRML
MONARCHAK	MONARCHAK	ON	NRML
KHLEIHRIAT	KHLEIHRIAT SPS	ON	NRML
LESKA	LESKA SPS	ON	NRML
SM NAGAR (TE)	SM NAGAR LOAD SPS	ON	NRML

Sl. No.	SPS under operation	SPS mapping status in SCADA (YES/No)
1	SPS related to outage of 220 Misa-Samaguri D/C lines	NO Mapping will be done shortly by last Week of March 2026
2	Related to outage of any one circuit of 220 kV Balipara-Sonabil D/C lines	NO Mapping will be done shortly by last Week of March 2026
3	Outage of 220 kV BTPS (Salakati) – Rangia I & II Line	NO Mapped till SLDC. SLDC to coordinate with NERLDC
4	SPS at Azara for Preventing Overloading of 400/220 kV, 2×315 MVA ICTs at Azara	NO

5	SPS related to overloading of any one of the 400/132kV, 2x360 MVA ICTs at Panyor Lower Hydro Power Station	NO
6	Outage/tripping of any one circuit of 132 kV Dimapur(PG)-Dimapur(NA) D/C Line	NO
7	SPS related to generation evacuation from Loktak HEP	NO As per NHPC, SCADA system is not available at Loktak. Mapping of SPS at Loktak HEP will take time & it will be completed after renovation work at Loktak plant.

It is to be noted that the SPS logic at Sonabil has recently been updated by AEGCL during 9th & 10th June 2026. In view of the criticality of SPS operation and system security, it is essential that all SPS-related status and trigger signals are made available at SLDC and NERLDC for continuous real-time monitoring and situational awareness.

All the utilities are requested to update the status of Mapping of SPS in the SCADA Display.

C.2 Spurious tripping of 132 kV Haflong (PG) - Haflong (AS) line on 16th Feb'2026:

(Ref: Agenda B.10| 89th PCCM |21st April 2026)

At 21:21 hrs of 16-02-2026, 132 kV Haflong (PG)-Haflong (AS) line tripped only from Haflong (AS) end due to intertrip command received in LDR relay. As per PMU signal, there was no fault observed in the system. AEGCL to update the reason of receipt of intertrip command in LDR relay at Haflong (AS).

Deliberation in 89th PCC meeting:

NERLDC informed that there was no fault in the system. As per AEGCL, 132 kV Haflong (PG)-Haflong (AS) line tripped from Haflong (AS) end due to inter-trip

received in LDR relay. However, PGCIL informed there was no inter trip signal transmission from PG end.

Requested AEGCL to check DC E/F at Haflong(AS) substation & share the event highlighting the inter trip signal received at Haflong. AEGCL assured to carry out the tests by the end of April'26.

C.3 Grid Disturbance at Luangmual, Melriat and Lunglei areas of Mizoram on 20th Feb'2026:

(Ref: Agenda B.11| 89th PCCM |21st April 2026)

At 03:26 Hrs of 20-02-2026, 132 kV Aizawl - Luangmual line tripped resulting in grid disturbance in_Luangmual, Melriat and Lunglei areas of Mizoram and load loss of 29 MW occurred.

As per the DR analysis, tripping occurred due to operation of Backup Earth Fault protection (Iy = 0.4 kA, In = 0.3 kA, Vy = 70 kV) with a tripping time of 1674 milliseconds from Aizawl end. No tripping was observed from Luangmual end.

Fault occurred due to burning of Y-Ph conductor on 33 kV side of the 132/33 kV,12.5 MVA ICT at Luangmual. Fault should have been cleared primarily by the HV (132 kV) side protection of the transformer through operation of Backup Earth Fault protection, thereby avoiding unnecessary tripping at the upstream substation, i.e. Aizawl (PG). P&ED Mizoram to update the reason of non-operation of HV side protection of 132/33 kV ICT at Luangmual.

Deliberation in 89th PCC meeting:

Forum noted that HV side of ICT at Luagmual should have isolated the fault prior to the operation of the CB1 at Aizawl, indicating a case of relay mis-coordination.

Forum instructed Mizoram to coordinate the relay settings between the ICT at Luangmual and Aizawl end for Luangmual line in coordination with NERPC and NERLDC at the earliest.

NERPC requested Mizoram to provide the settings of the ICT and Aizawl end for Luangmual feeder within one week in order to carry out the coordination study.

NERTS: The TMS for EF settings for 132kV Luanagmual feeder at Aizwal SS has been changed from 0.165 to 0.4. on 20th April 2026.

C.4 Grid Disturbance at Kohima & radially connected areas Pfutsero, Meluri, Zhadima, Chiephobozou areas & LHEP generating station of Nagaland:

(Ref: Agenda B.12| 89th PCCM |21st April 2026)

Deliberation in 89th PCC meeting:

Event 1:

NERLDC apprised that in the DR of Kohima end it has been observed that there was intermittent pickup of ZII at Kohima end for instances of 310 msecs & 150 msecs by the Main relay of 132 kV Dimapur – Kohima line resulted into failure of timely operation of ZII at the Kohima end and hence ZII operation at Karong.

Forum instructed DoP Nagaland to –

1. Test the Main relay at Kohima for the 132 kV Dimapur – Kohima line.
2. Transplay the DR output for the tripping in the main relay to check the performance.

Event 2:

DoP Nagaland informed that the reason for no operation of protection system at Kohima end is being looked into. NERLDC apprised that the ZIV initiation at Kohima for Karong bay raises concern that the actual fault location must be somewhere near the Kohima SS.

Forum instructed DoP Nagaland to –

1. Ensure timely submission of DR and EL so that thorough analysis of GDs may be done
2. Find out the location of fault and investigate into non-operation of protection system at Kohima and provide report to NERPC at the earliest.

Forum also instructed Manipur to look into the issue of operation of ZII in 73 msec, which is not in compliance with the standard time delay of 350-500 msec. Regarding the revival of 132kV Chiephobozou -Wokha line, DoP Nagaland updated that tower restoration works are under way and the line will tentatively be revived by end of April'26.

C.5 Repeated Grid Disturbance in Tipaimukh area of Manipur Power System:

(Ref: Agenda B.14| 89th PCCM |21st April 2026)

Deliberation in 89th PCC meeting:

NERLDC apprised that non-operation of protection system at Tipaimukh substation remains a long pending issue and causing frequent GD's at Tipaimukh.

Forum noted that MSPCL needs to ensure DR downloading facility at Tipaimukh & perform proper fault analysis. Additionally, MSPCL should perform the necessary testing of the CB at Tipaimukh at the earliest.

MSPCL informed that laptops have been procured and will be distributed to each substation shortly, after which, system for DR downloading and sharing will be put in place. Further he mentioned that accessing Tipaimukh substation is difficult to due to prevailing Law and Order situation in the state.

C.6 Repeated tripping of 132 kV Doyang-Sanis Line during March'2026:

(Ref: Agenda B.15| 89th PCCM |21st April 2026)

Deliberation in 89th PCC meeting:

Powergrid informed that there might be issue with Analog signal inputs to the relay which should be tested thoroughly.

DoP Nagaland expressed its inability to carry out the relay test on its own and requested the forum for necessary assistance. MS NERPC requested Powergrid to extend necessary support to DoP Nagaland for the testing. Powergrid requested Nagaland to send a formal request to them in this regard.

Status of CVT installation to be updated by DoP Nagaland.

C.7 Repeated tripping of 220 kV Misa-Kopili 2 & 3 Lines:

(Ref: Agenda 2.2| 238th OCCM |15th May 2026)

Deliberation in 238th OCC:

NEEPCO apprised the forum that there may be issues related to the BCU associated with the Kopili–Misa-2 and Kopili–Misa-3 lines. NEEPCO informed that the matter has already been taken up with M/s GE Vernova and representatives from the OEM are expected to visit by the last week of the month for detailed examination of the issue. NEEPCO further informed that, based on the observations during the visit, the status and further course of action would be intimated to NERPC and NERLDC. MS, NERPC directed that the matter may also be deliberated in detail during the upcoming PCC meeting of NERPC for further review and necessary action.

Action: NEEPCO to coordinate with M/s GE Vernova for detailed examination of the BCU issues associated with Kopili–Misa-2 and Kopili–Misa-3 lines and update NERPC and NERLDC. The matter shall also be deliberated in the upcoming PCC meeting of NERPC.

*****

Minutes of Meeting on Introduction of SPS in the NER System

A meeting was held on 29.05.2026 at 12:00 hrs at the SLDC Assam office with officials from NERLDC, SLDC Assam, and AEGCL to discuss the introduction of a new Special Protection Scheme (SPS) in the North Eastern Region (NER) power system. The list of attendees is enclosed as *Annexure-A*.

1. Presentation by NERLDC

The NERLDC team highlighted that due to delays in the commissioning of the upcoming 400 kV Sonapur and 400 kV Rangia substations in Assam, high loading is expected on the following transmission corridors:

- 400 kV Bongaigaon–Azara line
- 220 kV BTPS–Agia D/C line

System studies indicate that during periods of high demand in the North Eastern Region, particularly in the Assam power system, the combined loading on the above corridors may exceed 600 MW.

Under such operating conditions, tripping of the 400 kV Bongaigaon–Azara line may result in critical loading of approximately 190 MW on each circuit of the 220 kV Agia–BTPS D/C line. Subsequent tripping of the 220 kV Agia–BTPS D/C line may lead to cascading outages in the Assam power system. Consequently, grid disturbances may occur in both the Capital Region and the BTPS–Rangia area of the Assam power system. In this regard, NERLDC highlighted that a grid disturbance involving a load loss of approximately 410 MW occurred in the BTPS–Rangia area of the Assam power system at 22:32 hrs on 14.06.2024 following the tripping of the 220 kV Agia–BTPS D/C line.

Following the outage of the 220 kV Agia–BTPS D/C line, the following transmission lines are likely to experience critical loading and may trip:

- 220 kV Balipara–Sonabil D/C
- 220 kV Misa–Samaguri D/C

In addition, critical loading may occur on the 220 kV Azara–Sarusajai D/C line, which could result in a low-voltage scenario in the Capital Region of the Assam power system.

Presentation attached in *Annexure-B*.

2. SPS Proposal

To mitigate the above contingency, NERLDC proposed implementation of an SPS involving automatic load disconnection at Agia and nearby substations whenever either of the following conditions is met:

- The combined loading on the 400 kV Bongaigaon–Azara line and the 220 kV BTPS–Agia D/C line exceeds 585 MW; or
- The loading on the 220 kV BTPS–Agia D/C line exceeds 500 A in each circuit.

NERLDC informed that designing an SPS based on combined flow-gate monitoring would require a robust communication infrastructure and may therefore take a longer time to implement. As an interim measure, an SPS based on local current measurements may be designed and implemented at an earlier stage.

3. Queries Raised by AEGCL and SLDC Assam

AEGCL raised the following points:

1. The quantum of load to be disconnected under the proposed SPS may be specified.
2. Since Agia Substation also supplies power to the Meghalaya power system, the possibility of load disconnection in the Meghalaya system may also be examined.

4. Clarifications by NERLDC

In response, NERLDC informed that:

- Load disconnection at Agia and Boko has a sensitivity of approximately 60–65%.
- Load disconnection at Azara has a sensitivity of around 50%.

Based on these sensitivities, approximately 45 MW of load shedding would be required to reduce the loading on the corridor from 190 MVA to 175 MVA.

Regarding load disconnection in the Meghalaya system, NERLDC stated that:

- Sensitivity at Meghalaya nodes is comparatively low.
- For an SPS based on local current measurements, local feeders would need to be disconnected.
- Isolation of the Meghalaya system from the Agia side could adversely affect system stability and may lead to grid disturbances under low-voltage conditions.

Further, it was observed that during periods when the 400 kV Bongaigaon–Azara line and the 220 kV BTPS–Agia D/C line experience high loading, the power flow on the 132 kV Agia–Mendipathar and 132 kV Agia–Nangalbibra lines remains comparatively low due to internal hydro generation in Meghalaya system. Therefore, isolating these lines would not achieve the intended objective of the SPS.

NERLDC emphasized that disconnection of Assam load fed from the Agia side would provide the desired relief on the 220 kV Agia–BTPS D/C line.

5. Decision of the Meeting

After detailed deliberations, it was noted that the primary objective of the SPS is to safeguard the Capital Region of the Assam power system by ensuring the availability of the 220 kV Agia–BTPS D/C link. The availability of this transmission corridor is not only critical for the Capital Region but is also essential for maintaining reliable voltage levels in the Rangia and BTPS areas of the Assam power system.

Accordingly, It was agreed that the SPS may be implemented through local load disconnection at Agia and Matia substations.

6. Protection Scheme Implementation

NERLDC enquired about the availability of overcurrent (O/C) settings in the Main-I and Main-II protection relays of the 220 kV BTPS–Agia D/C line.

AEGCL informed that, in the event that overcurrent functionality is not available in the existing Main-I and Main-II relays, a dedicated spare overcurrent relay will be arranged and utilized for SPS implementation.

7. Status of Upcoming Substations

AEGCL informed that:

- The 400 kV Rangia Substation is expected to be commissioned by April 2027.
- The 400 kV Sonapur Substation may face further delays due to Right of Way (RoW) issues.

8. Conclusion

The meeting concluded with a vote of thanks proposed by CGM (SO), NERLDC.

Annexure-A

List of Attendees

Sl. No.	Name	Designation	Organisation
1	Neeraj Kumar	CGM(SO)	NERLDC
2	Asif Iqbal	DGM	AEGCL
3	Ashutosh Bhattacharyya	GM	AEGCL
4	Ashishek Kalita	DM	AEGCL
5	Pranab Saha	DGM	AEGCL
6	Priyabrata Deb	DM	AEGCL
7	Nilutpal Baruah	AGM	SLDC/ AEGCL
8	Subhra Ghosh	AM	NERLDC
9	Sachin K. Singh	Manager	NERLDC
10	Priyakshi Rajkhowa	DM	AEGCL
11	Sushmita Das	JM	SLDC/ AEGCL

ATTENDANCE SHEET FOR THE MEETING FOR DISCUSSION ON INTRODUCTION OF SPS IN NER SYSTEM

	DATE	29.05.2026	VENUE	SLDC CONFERENCE ROOM		
SL.NO	NAME	DESIGNATION	ORGANISATION	E-MAIL ID	PHONE NUMBER	SIGNATURE
1	Neeraj Kumar	CGM	Grid India	neeraj.kumar@grid-india.in	9910907949	
2	Ajj Iqbal	DGM	AEGCL	dgmtic.mirza@aegcl.co.in	9435733302	
3	Ashutosh Bhattacharyya	GM	AEGCL	ashuae@rediffmail.com	99541-06916	
4	Abhishek Kalita	DM	AEGCL	abhisheko.kalita@aegcl.co.in	8486213068	
5	Pranab Saha	DGM	AEGCL	pranab.saha@aegcl.co.in	9435561717	
6	Priyabrata Deb	DM	AEGCL	priyabrata.deb@aegcl.co.in	9435401135	
7	Nillulpal Bormah	AGM, SLDC	AEGCL	nillulpal.bormah@aegcl.co.in	7002885719	
8	Subhra Ghosh	AM	GRID INDIA	subhra@grid-india.in	8415857079	
9	Sachin Kr Singh	Manager	"	sachinsingh@grid-india.in	8826991514	
10	Priyakshi Rajkhowa	DM	AEGCL	priyakshi.rajkhowa@aegcl.co.in	9453093172	
11	Sushmita Das	JM	SLDC, ASSAM	sushmita.das@aegcl.co.in	9864956879	
12						
13						
14						
15						
16						
17						
18						
19						
20						

Annexure-B

Meeting Regarding Introduction of SPS in NER System

NERLDC Reliability

29-05-2026

Issues

- High loading has been observed on the 400 kV Bongaigaon–Azara line and the 220 kV BTPS–Agia D/C line.
- Studies suggest that during periods of high demand in the North Eastern Region (NER), the combined loading on the 400 kV Bongaigaon–Azara line and the 220 kV BTPS–Agia D/C line may exceed 600 MW.
- Under such scenarios, tripping of the 400 kV Bongaigaon–Azara line may result in heavy loading of around 190 MVA on each circuit of the 220 kV Agia–BTPS D/C line. Subsequently, tripping of the 220 kV Agia–BTPS D/C line may lead to cascading tripping in the Assam power system.
- Following the tripping of the 220 kV Agia–BTPS D/C line, the following lines may also trip due to overloading:
- 220 kV Balipara–Sonabil D/C \
- 220 kV Misa–Samaguri D/C
- In addition, critical loading may occur on the 220 kV Azara–Sarusajai D/C line.
- Therefore, it is proposed that an SPS may be introduced for load disconnection at Agia and nearby substations whenever the combined loading on the 400 kV Bongaigaon–Azara line and the 220 kV BTPS–Agia D/C line exceeds 600 MW.

Base case –Assam load :2865 MW

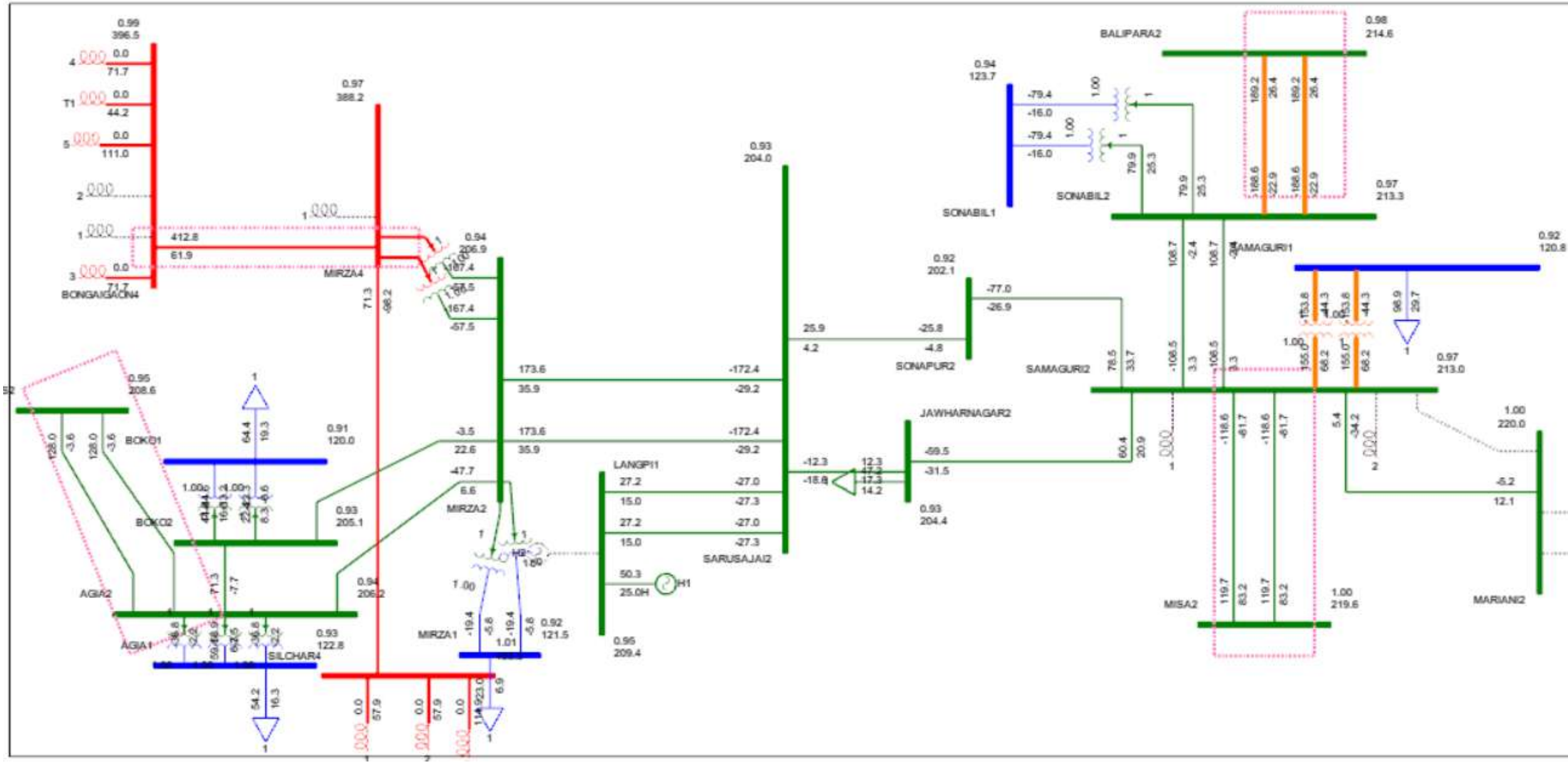

Base case –Assam load :2865 MW under N-1 contingency of 400 kV Bongaigaon-Azara line

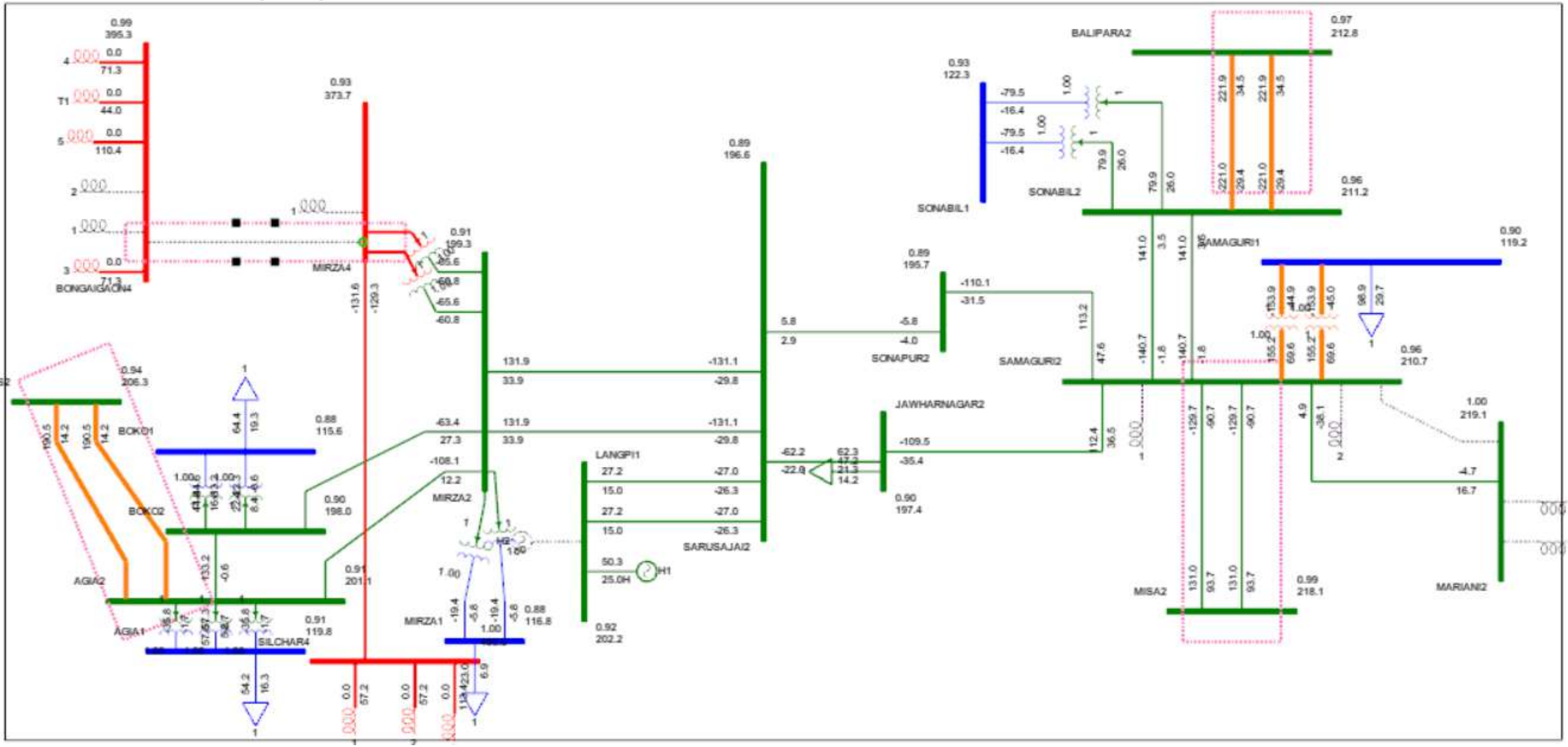

Duration curve of BTPS-Agia and Bongaigaon-Azara line

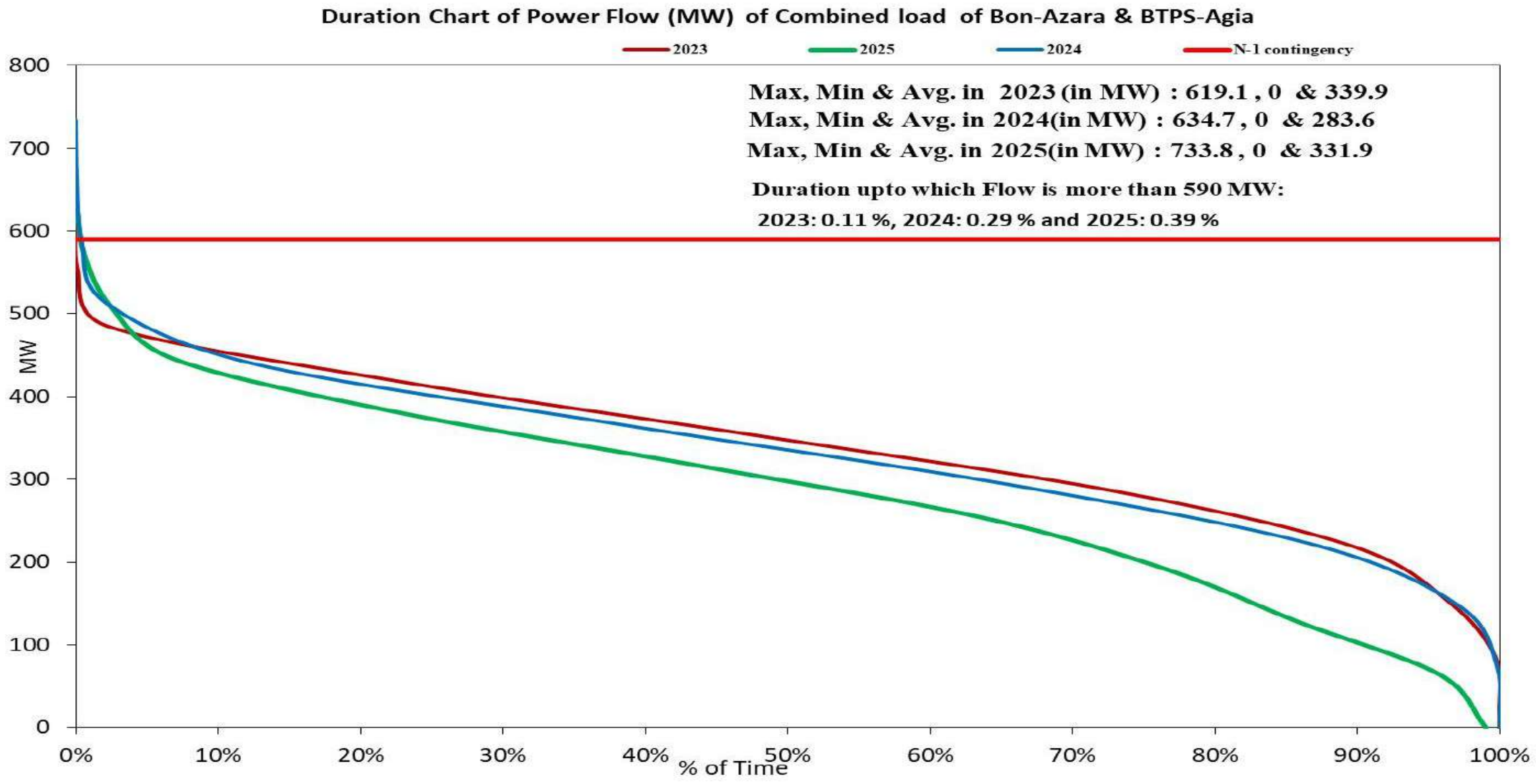

Load profile of BTPS-Agia and Bongaigaon-Azara line

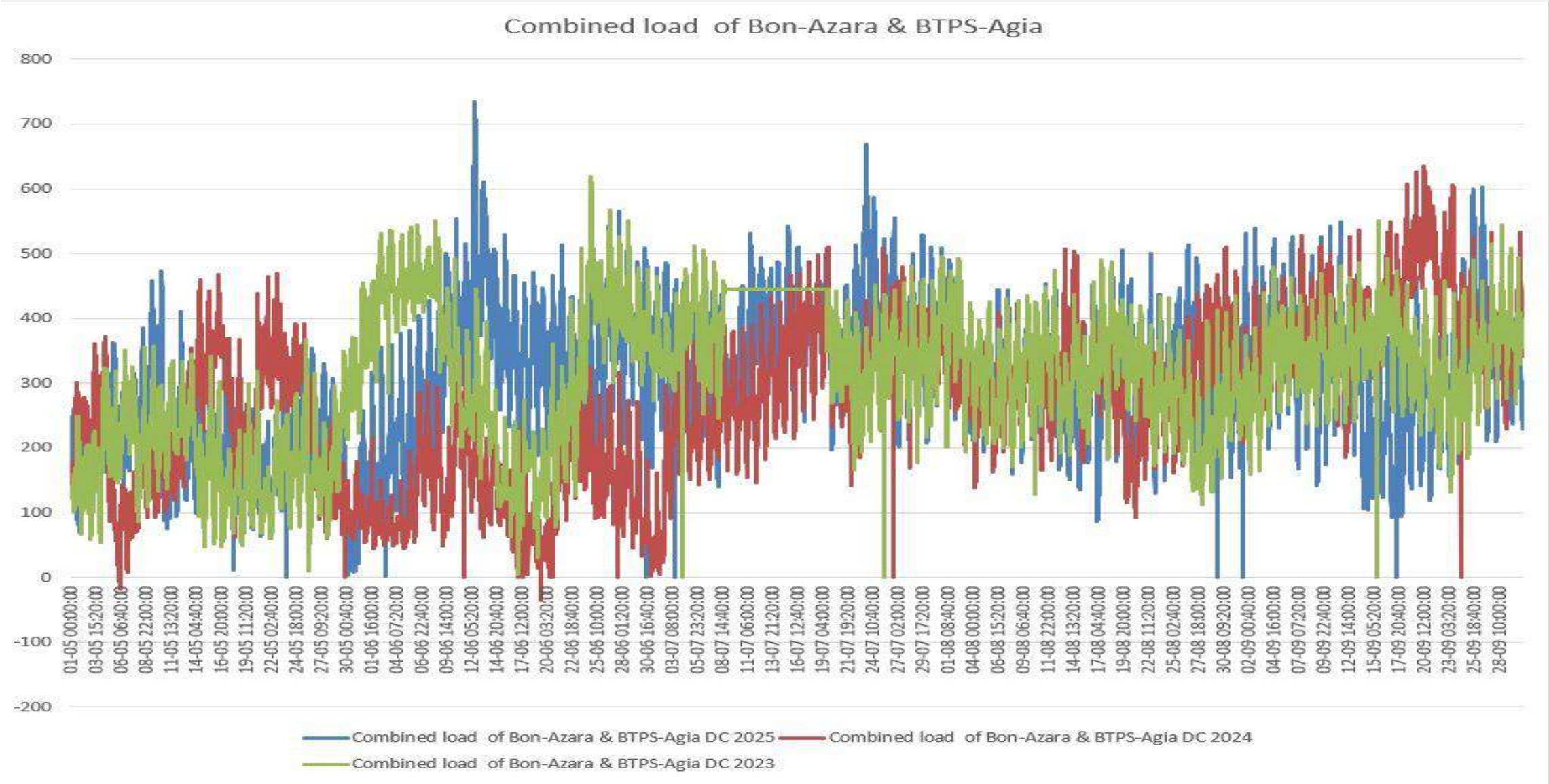

Agia load sensitivity-60%

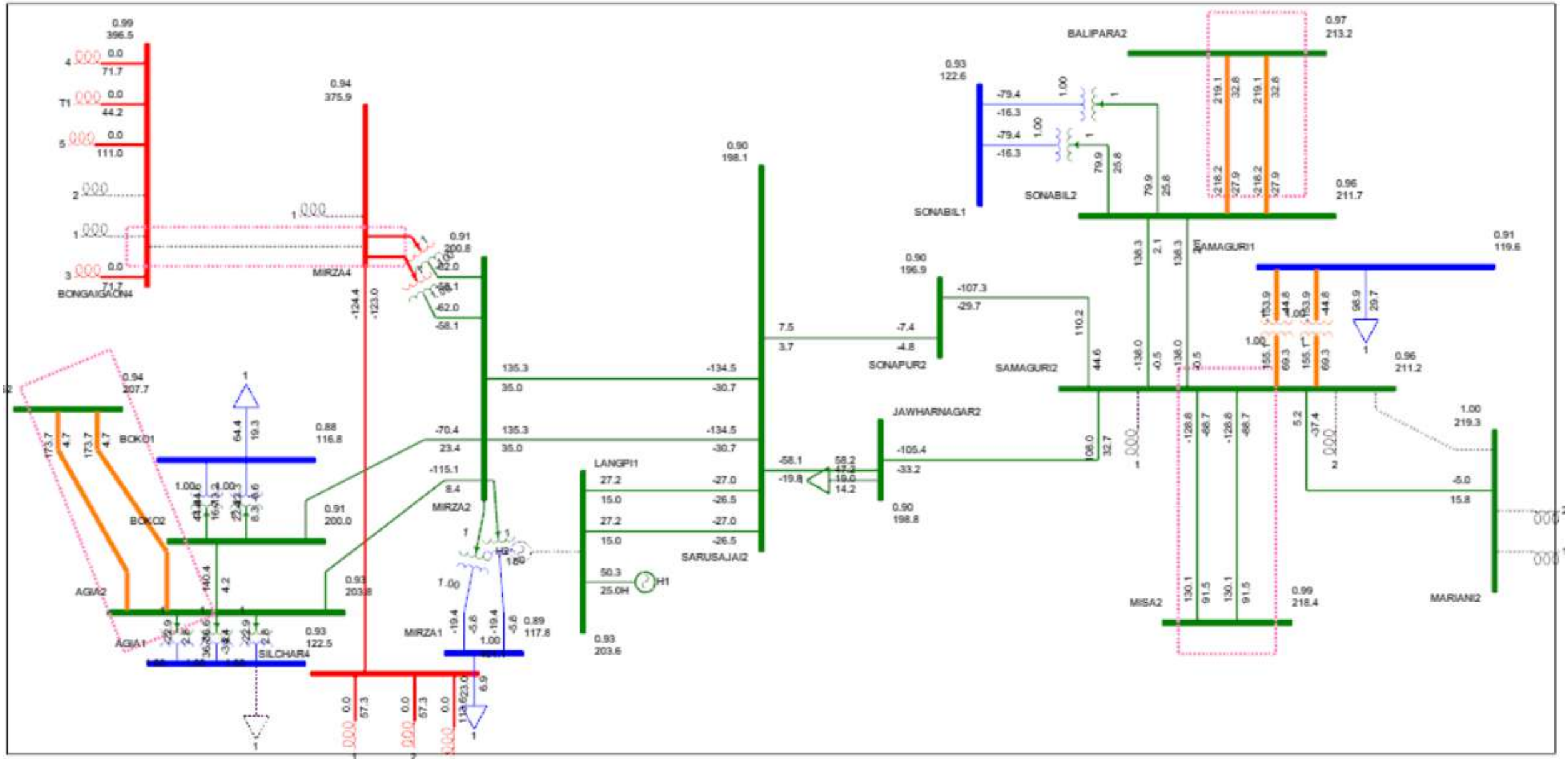

Azara load sensitivity-37%

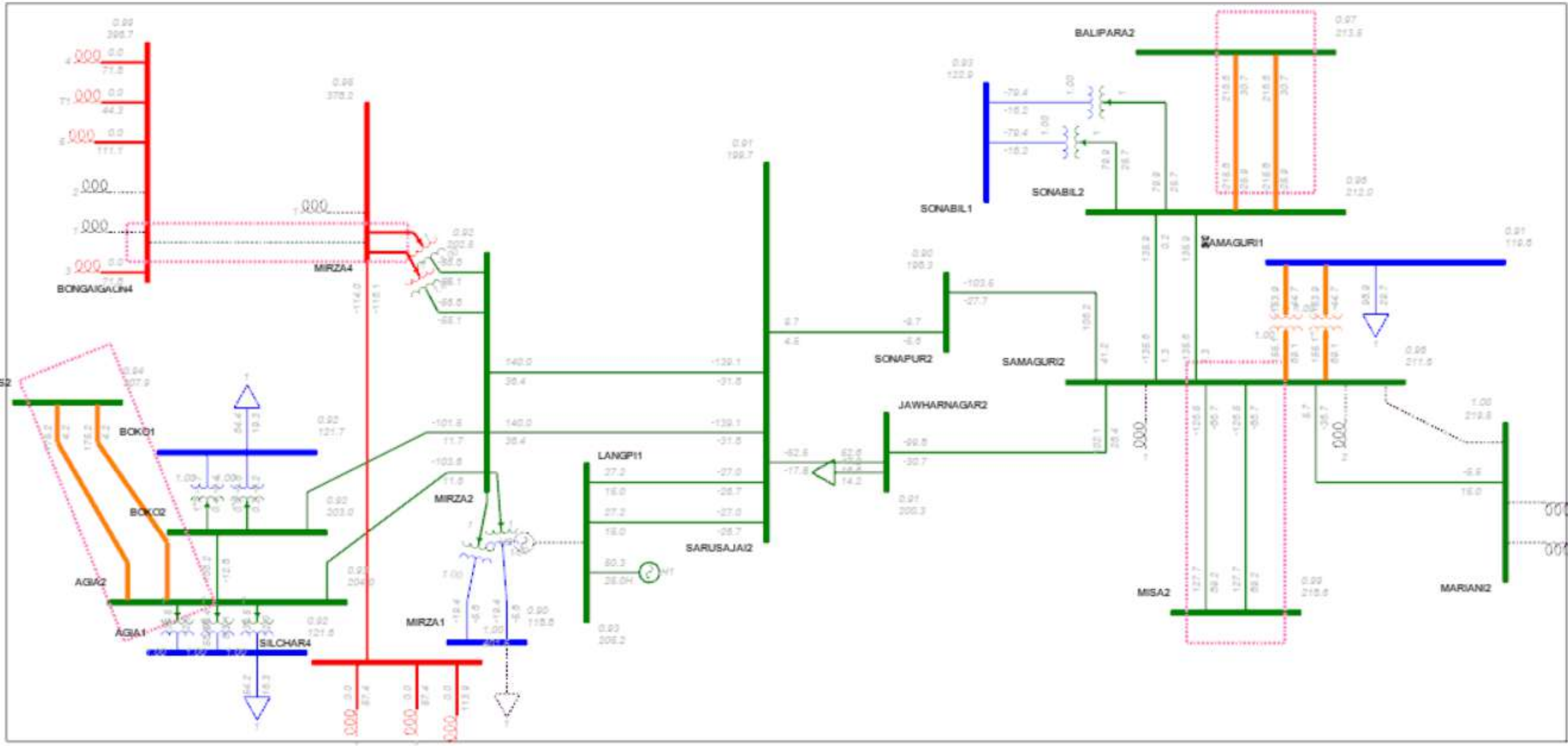

Boko load sensitivity-47%

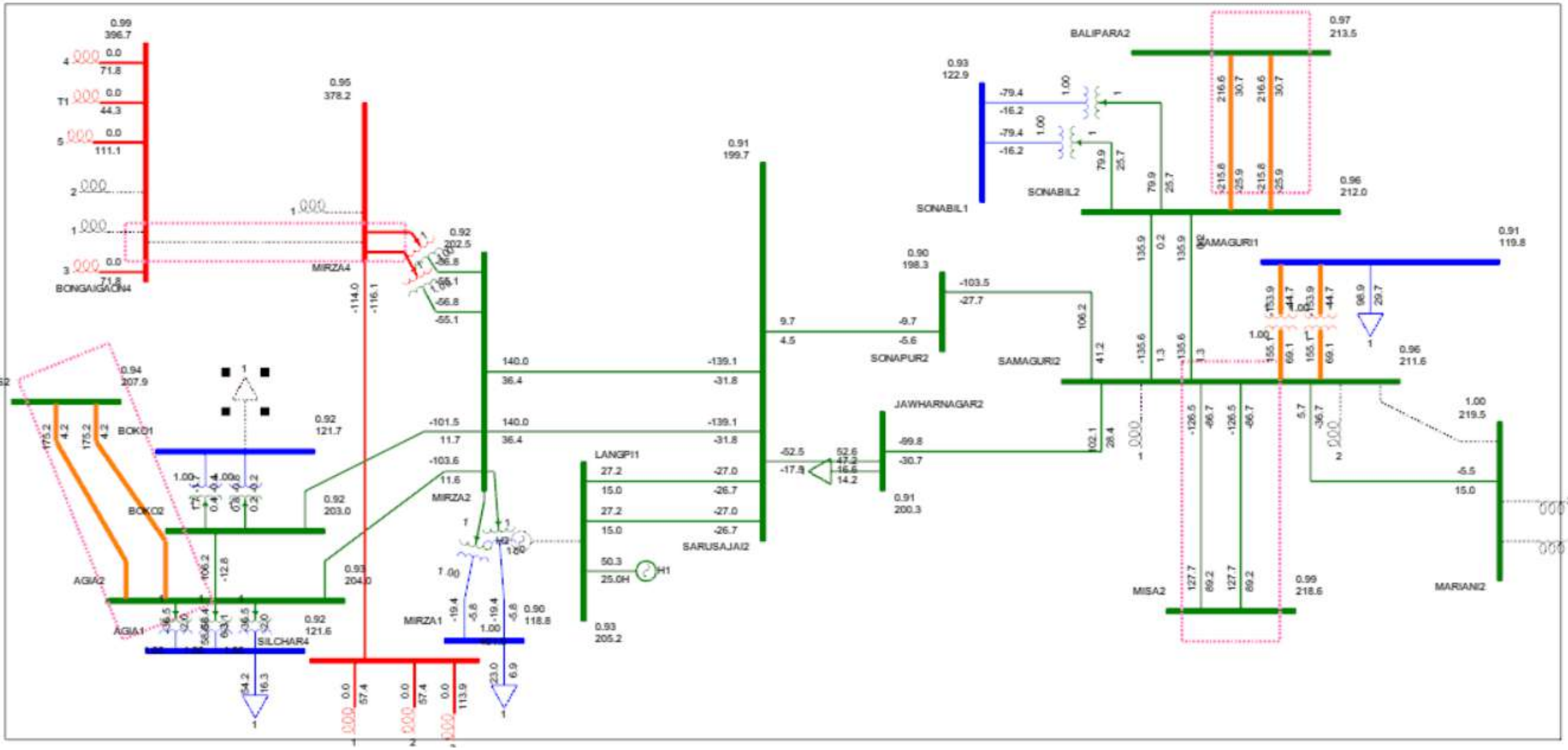

Observations:

- The duration curve suggest that around o.11%. 0.29 % and 0.39 % of time combined flow of 400 kV Bongaigaon-Azara and 220 kV BTPS-Agia DC line was above 590 MVA.
- First Langpi generation to be bring to reduce the combined loading of 400 kV Bongaigaon-Azara and 220 kV BTPS-Agia DC below 590 MVA. Generation sensitivity on the flow is 60 %
- Load disconnection at Agia and Boko has a sensitivity of approximately 62% and 47 % respectively.
- Load disconnection at Azara has a sensitivity of around 37%.
- Based on these sensitivities, approximately 50 MW of load shedding would be require at Agia and nearby station to reduce the loading on the corridor from 190 MVA to 175 MVA

Annexure II

Gist of the Meeting

Date: 12.05.2026

Time: 15:00 Hrs

Mode: Online

Participants: NERPC, SLDC Tripura and NERLDC

Background: As per the 236th OCCM, Tripura requested a revised study for the Agartala Islanding Scheme in view of the commissioning of several elements under the NERPSIP Scheme. Accordingly, data pertaining to the newly commissioned lines was shared by Tripura. A meeting was held on 12th May 2026 to discuss the revised scheme and to confirm the status of the new lines commissioned under the NERPSIP Scheme.

Gist:

1. The following lines are under the NERPSIP Scheme, and their present charging status is as follows:

Name of the Lines	Line Configuration(S/C or D/C)	Status confirmation by Tripura
132 kV Bagafa - Belonia	D/C	Both circuits in service
132 kV Belonia - Sabroom	D/C	One circuit charged currently, other ckt to be charged by next month
132 kV Bagafa - Satchand	S/C	Both circuits in service
132 kV Rabindranagar - Rokhia	D/C	One circuit charged currently
133 kV Rabindranagar - Belonia	D/C	Both circuits in service
132 kV Udaipur - Bagafa	D/C	Both circuits in service
132 kV SM Nagar - Gokulnagar	D/C	One circuit charged currently
132 kV Rokhia - Gokulnagar	D/C	Not yet charged
132 kV Kailashahar - Dharmanagar	D/C	Not yet charged
132 kV Udaipur - Amarpur	D/C	Both circuits in service
132 kV Ambassa - Manu	S/C	In service
132 kV PK Bari (ISTS) - Manu	S/C	Line is currently open; FTC is yet to be done

2. NERLDC presented the load and generation duration curves of Tripura for Monarchak, Rokhia, and AgGBPS, and informed that the generation available within the island is lower than the total load of Tripura. Therefore, only limited nodes under Category-I may be considered for the Islanding Scheme. NERLDC proposed the inclusion of Agartala, Rokhia, Budhjungnagar, Udaipur, Surajmaninagar, and Rabindranagar substations. Tripura agreed to the proposal.
3. Tripura will submit one-year hourly demand data for Agartala, Rokhia, Budhjungnagar, Udaipur, Surajmaninagar, and Rabindranagar substations for FY 2025–26.
4. Tripura requested NERLDC to consider the 66 kV Badarghat node under the islanding scheme, as it falls under Category-I criticality. NERLDC advised that the Badarghat load may be included in the Islanding Scheme only if it is permanently fed from the 132 kV Rokhia node.

Annexure III

Detailed Report of SPS operation & Assesment of Protection performance indices of SPS in <Subtation/Area/State Name> of NER

(To be submitted by User/SLDC after SPS operation as per IEGC section 16.3 & 16.4)

Date: dd-mm-yyyy

1. **Name of the Scheme:**
2. **Purpose of the Scheme:**
3. **Time and Date of the Event:**
4. **Event Category: Correct Operation/ Non operation/ Misoperation**
5. **Location(Substation/Control Area):**
6. **Event Description :**

Pre fault, during fault and Post fault

7. **Load and Generation loss(in MW and MU) :**
8. **Duration of interruption:**
9. **Network across the affected area :**
10. **Details of Non-operation/ Mis-operation (if any):**
11. **Major Elements Tripped:**

Sl no	Name	Trip time (hh:mm:ss)	Restoration time (hh:mm:ss)	Relay End 1	Relay End 2	Element wise Load/Gen Loss in MW

12. **Protection/Operational issues observed:**

13. **Action Taken/Remedial Measures:**

14. **Protection performance indices of SPS operation:**

Sl. No.	Name of SPS	Nc	Nf	Nu	Ni=Nf+Nu	D= (Nc/Nc+Nf)	S= (Nc/Nc+Nu)	R= (Nc/Nc+Ni)

Abbreviations:

Nc :- Number of correct operations

Nf :- Number of failures to operate

Ni =(Nf+Nu):- Number of incorrect operation & sum of Nu+Nf

Nu :- Number of unwanted operation

D :- Dependability Index

S :- Secuirty Index

R :- Reliability Index

15. **Modification required in the present Logic (if any):**
16. **Key Lessons Learnt (if any):**

Shift-In Charge,

User/SLDC

Copy to:

1. **NERLDC**
2. **Affected utilities / user**
3. **MS, NERPC**

Annexure:

Annexure IV

ग्रिड-इंडिया
GRID-INDIA

ग्रिड कंट्रोलर ऑफ इंडिया लिमिटेड
(भारत सरकार का उद्यम)
GRID CONTROLLER OF INDIA LIMITED
(A Government of India Enterprise)
[Formerly Power System Operation Corporation Limited (POSOCO)]
उत्तर पूर्वी क्षेत्रीय भार प्रेषण केंद्र/ North Eastern Regional Load Despatch Centre
कार्यालय: पावर हाउस, काहिलिपारा, गुवाहाटी- 781019(असम)
Office: Power House, Kahilipara, Guwahati- 781019 (Assam)
CIN: U40105DL2009GOI188682, Website: www.nerldc.in, E-mail: nerldc@grid-india.in, Mob: 6901274070

Ref: NERLDC/SO/2026-27/14/9277 ***दिनांक/Date: 12.05.2026***

सेवा में/To:

1. महाप्रबंधक (उपकेंद्र), एमएसपीसीएल, केशमपट, इम्फाल पश्चिम, मणिपुर – 795001 / GM (Sub-Station), MSPCL, Keishampat, Imphal West, Manipur – 795001
2. महाप्रबंधक (पारेषण), एमएसपीसीएल, केशमपट, इम्फाल पश्चिम, मणिपुर – 795001 / GM (Transmission), MSPCL, Keishampat, Imphal West, Manipur – 795001
3. महाप्रबंधक, राज्य भार प्रेषण केंद्र, एमएसपीसीएल, विद्युत परिसर, केइसुम्फट जंक्शन, इम्फाल, मणिपुर – 795001 / The General Manager, State Load Despatch Centre, Manipur State Power Company Ltd (MSPCL), Electricity Complex, Keisumphat Junction, Imphal, Manipur-795001

बिषय/Sub: मणिपुर विद्युत प्रणाली के गामफाजोल एवं कारोन्ग क्षेत्रों में बार-बार होने वाले ग्रिड व्यवधान / Repeated Grid Disturbance in Gamphajol and Karong areas of Manipur Power System

महोदय/महोदया,

जैसा कि आपको ज्ञात हैं, मणिपुर विद्युत प्रणाली के गामफाजोल एवं कारोन्ग क्षेत्र शेष उत्तर-पूर्वी ग्रिड से 132 केवी युरेम्बम-गामफाजोल लाइन तथा 132 केवी कारोन्ग-कोहिमा लाइनों के माध्यम से जुड़े हुए हैं।

पिछले महीनों में, मार्च 2026 से मई 2026 (दिनांक 12.05.2026 तक) के दौरान 132 केवी युरेम्बम-गामफाजोल, 132 केवी गामफाजोल-कारोन्ग तथा 132 केवी कारोन्ग-कोहिमा लाइनों के बार-बार ट्रिप होने की घटनाएं देखी गईं, जिसके परिणामस्वरूप मणिपुर विद्युत प्रणाली के गामफाजोल एवं कारोन्ग क्षेत्रों में ग्रिड व्यवधान उत्पन्न हुआ।

मणिपुर विद्युत प्रणाली के कारोन्ग क्षेत्र में कुल पाँच (05) ग्रिड व्यवधान तथा गामफाजोल क्षेत्र में भी कुल चार (04) ग्रिड व्यवधान उत्पन्न हुए, जो अत्यंत गंभीर चिंता का विषय है।

उपरोक्त सात (07) ग्रिड घटनाओं का विवरण परिशिष्ट-I में संलग्न है।

परिशिष्ट-I में उल्लिखित ट्रिपिंग के विवरण से निम्नलिखित प्रमुख अवलोकन निष्कर्षित किए जा सकते हैं:

1. 132 केवी गामफाजोल-युरेम्बम लाइन हेतु गामफाजोल में तथा 132 केवी गामफाजोल-कारोन्ग लाइन हेतु कारोन्ग में स्थापित सुरक्षा प्रणाली लाइन में उत्पन्न फॉल्ट को पृथक करने में विफल रही, जिसके परिणामस्वरूप दूरस्थ छोर से ज़ोन-III सुरक्षा के संचालन के कारण स्वस्थ लाइनों के ट्रिप होने द्वारा फॉल्ट का निवारण हुआ। इस संबंध में कारणों की जांच एमएसपीसीएल द्वारा किए जाने की आवश्यकता है। साथ ही, 132 केवी युरेम्बम-गामफाजोल लाइन के युरेम्बम छोर पर सर्किट ब्रेकर के ओपनिंग मैकेनिज्म में भी समस्या प्रतीत होती है, जिसकी जांच किया जाना आवश्यक है।
2. युरेम्बम, गामफाजोल एवं कारोन्ग उपकेंद्रों के डीआर/ईएल फाइलों का प्रस्तुत न किया जाना तथा विस्तृत प्रतिवेदन का जमा न किया जाना चिंता का विषय है, क्योंकि इससे घटनाओं का समुचित विश्लेषण प्रभावित होता है। कृपया ध्यान दें कि इन प्रतिवेदनों का समयबद्ध प्रस्तुतिकरण आईईजीसी-2023 के प्रावधानों के अनुसार अनिवार्य है।

गामफाजोल एवं कारोन्ग उपकेंद्रों में बार-बार होने वाली ग्रिड व्यवधान की समस्या पर मासिक पीसीसी बैठकों में भी नियमित रूप से चर्चा की गई है। तथापि, आज तक कोई सुधारात्मक कार्रवाई लागू नहीं की गई है, जिसके परिणामस्वरूप मणिपुर विद्युत प्रणाली के गामफाजोल एवं कारोन्ग क्षेत्रों में बार-बार ग्रिड व्यवधान उत्पन्न हो रहे हैं।

अतः, एमएसपीसीएल से पुनः अनुरोध किया जाता है कि गामफाजोल एवं कारोन्ग में स्थापित सर्किट ब्रेकरों तथा प्रोटेक्शन रिले की गहन जांच की जाए, ताकि मूल कारणों की पहचान कर उपयुक्त सुधारात्मक उपाय किए जा सकें एवं स्वस्थ फीडरों की अनावश्यक ट्रिपिंग तथा मणिपुर विद्युत प्रणाली के गामफाजोल एवं कारोन्ग क्षेत्रों में ब्लैकआउट की घटनाओं को रोका जा सके।

कृपया किए गए सुधारात्मक उपायों की एक प्रति यथाशीघ्र एनईआरपीसी एवं एनईआरएलडीसी के साथ साझा करने का कष्ट करें।

सुरक्षित एवं विश्वसनीय ग्रिड संचालन सुनिश्चित करने हेतु इस संबंध में आपका सहयोग अपेक्षित है।

As you are aware that, Gamphajol and Karong areas of Manipur power system are connected to the rest of the NER grid through 132 kV Yurembam-Gamphajol Line & 132 kV Karong-Kohima Lines.

In the previous months, between March 2026 to May 2026 (till 12.05.2026), frequent tripping of 132 kV Yurembam-Gamphajol, 132 kV Gamphajol-Karong & 132 kV Karong-Kohima lines were observed resulting in grid disturbance in Gamphajol and Karong areas of Manipur power system.
A total of five (05) grid disturbance occurred in Karong area and four (04) grid disturbance occurred in Gamphajol area of Manipur power system which is a matter of serious concern.

The details of above seven (07) number of grid events are attached as **Annexure-I.**

Following are the key observations as can be inferred from the details of the tripping indicated in **Annexure-I**:

1. The protection system at Gamphajol for 132 kV Gamphajol-Yurembam line and at Karong for 132 kV Gamphajol-Karong line failed to isolate the fault in the line, leading to clearing of the fault by tripping of the healthy lines on operation of Zone-III protection from the remote end. The reason for the same needs to be investigated by MSPCL. Also, there appears to be an issue with CB opening mechanism at Yurembam end for 132 kV Yurembam-Gamphajol line which needs to be checked.
2. Non-submission of DR/EL files of Yurembam, Gamphajol and Karong Substations and Non-submission of detailed report is a matter of concern as it hampers proper event analysis. Please note that timely submission of these reports are mandated as per IEGC-2023.

The issue of repeated grid disturbances at Gamphajol and Karong Substation has been regularly discussed in the monthly PCC meetings also. However, no corrective action has been implemented till date, resulting in repeated grid disturbances in the Gamphajol and Karong area of Manipur power system.

Therefore, MSPCL is once again requested to carry out thorough checking of the circuit breakers and protection relays at Gamphajol and Karong to identify the root cause and take appropriate corrective measures so as to prevent unwanted tripping of healthy feeders as well as blackouts in the Gamphajol and Karong areas of the Manipur power system.

A copy of the remedial measures taken may please be shared with NERPC and NERLDC at the earliest.

Your cooperation in this regard is requested for safe and secure grid operation.

धन्यवाद एवं सादर सहित/
With thanks and regards,

भवदीय / Yours sincerely,

BISWAJIT SAHU
Digitally signed by BISWAJIT SAHU
Date: 2026.05.12 18:31:37 +05'30'

(विश्वजीत साहू / Biswajit Sahu**)**
मुख्य महाप्रबंधक (एस.ओ) /C.G.M. (S.O.)
उपूक्षेभाप्रेके, गुवाहाटी / NERLDC, Guwahati

संलग्नक/Enclosures:

1. परिशिष्ट -I /Annexure-I: Detailed Event Analysis

प्रतिलिपि/Copy to:

1. सदस्य सचिव, एनईआरपीसी, शिलांग – 793006 / Member Secretary, NERPC, Shillong-793006
2. प्रबंध निदेशक, मणिपुर राज्य विद्युत कंपनी लिमिटेड, विद्युत परिसर, केशमपट जंक्शन, इम्फाल – 795001 / The Managing Director, Manipur State Power Company Ltd, Electricity Complex, Keishampat Junction, Imphal-795001
3. मुख्य महाप्रबंधक, प्रभारी, एनईआरएलडीसी, गुवाहाटी – 781019 / Chief General Manager, In-charge, NERLDC, Guwahati- 781019

Annexure-I:

The details of the grid disturbances are as follows:

Sl. No.	Transmission Element name	Relay Indication End A	Relay Indication End B	Analysis based on DR/EL	Discussion on PCC forum
Event 1: GD in Karong area at 20:52 Hrs of 15-03-2026. Load loss of 3 MW					
1	132 kV Gamphajol-Karong Line	DP, ZI, B-N, 5.2 Km (DR/EL not submitted)	No tripping (DR/EL not submitted)	Suspected B-N fault in 132 kV Gamphajol-Karong line cleared from Gamphajol end on ZI. Protection system at Karong end for 132 kV Gamphajol-Karong line failed to isolate the fault in the line resulting in clearing of fault by tripping of healthy 132 kV Karong-Kohima line on ZIII from remote end within 850 msec.	Discussed in 89th PCCM on 21st April 2026
2	132 kV Kohima-Karong Line	DP, ZIII, B-N	No tripping (DR/EL not submitted)		
Event 2: GD in Karong area at 01:01 Hrs of 16-03-2026. Load loss of 3 MW					
1	132 kV Kohima-Karong Line	I>4 trip, B-N (DP, ZII started)	No tripping (radial as 132 kV Gamphajol-Karong line under tripped condition since 20:52 hrs of 15-03-2026)	Metallic B-N fault (Ib-1.2 kA, In-1.1 kA) initiated at 01:00:46.198 hrs which was cleared within 131 msec from Kohima end likely on operation of B/U protection. As per EL, at 01:00:46.279 hrs, I>4 trip observed (DP, ZII also started in Main relay). No tripping from Karong end (radial)	Discussed in Pre-PCC online meeting on 16th April 2026
Event 3: GD in Karong, Gamphajol areas of Manipur & Kohima, Meluri, Zhadima, Chiephebozou areas of Nagaland at 16:13 Hrs of 17-03-2026. Load loss of 33 MW					
1	132 kV Yurembam-Gamphajol Line	DP, ZI, B-N, 2.6 Km, 9.3 kA (DR/EL not submitted)	DP, ZI (DR/EL not submitted)	Fault in 132 kV Yurembam-Gamphajol Line. Proper analysis could not be done due to non-submission of DR/EL by MSPCL.	Discussed in Pre-PCC online meeting on 16th April 2026

				Karong, Gamphajol areas of Manipur & Kohima, Meluri, Zhadima, Chiephebozou areas of Nagaland were radially connected to the grid through 132 kV Yurembam-Gamphajol Line as 132 kV Chiephobozou-Wokha line under shutdown since 13:26 Hrs of 30-09-2025 & 132kV Dimapur (PG)-Kohima line under ESD since 15:30 Hrs of 17 03-2026.	
Event 4: GD in Gamphajol area at 00:48 Hrs of 22-03-2026. Load loss of 2 MW					
1	132 kV Yurembam-Gamphajol Line	Not furnished (DR/EL not submitted)		As informed by MSPCL, CB opening mechanism was faulty at Yurembam for 132 kV Gamphajol Line. Proper analysis could not be done due to non-submission of DR/EL by MSPCL.	Discussed in Pre-PCC online meeting on 16th April 2026
2	132 kV Gamphajol-Karong Line	Not furnished (DR/EL not submitted)			
Event 5: GD in Gamphajol and Karong areas at 08:22 Hrs of 10-04-2026. Load loss of 5 MW					
1	132 kV Yurembam-Gamphajol Line	DP, ZI, B-N, 4.4 Km (DR/EL not submitted)	DP, ZI, B-N, 7.2 Km (DR/EL not submitted)	Suspected that fault was in 132 kV Yurembam-Gamphajol Line as fault detected in ZI from both the ends (as per FIR). Fault was not cleared from Gamphajol end which led to tripping of healthy 132 kV Gamphajol-Karong & 132 kV Karong-Kohima lines from remote ends on operation of ZIII.	-
2	132 kV Gamphajol-Karong Line	No tripping (DR/EL not submitted)	DP, ZIII, 54.55 Km (DR/EL not submitted)		
3	132 kV Kohima-Karong Line	DP, ZIII (DR/EL not submitted)	No tripping (DR/EL not submitted)		
Event 6: GD in Gamphajol area at 13:44 Hrs of 01-05-2026. Load loss of 20 MW					

1	132 kV Yurembam-Gamphajol Line	DP, ZI, 6.5 Km (DR/EL not submitted)	DP, ZI, 17.2 Km (DR file not opening)	Suspected that R-N fault in 132 kV Yurembam-Gamphajol Line as fault detected in ZI from both the ends (as per FIR) Fault was not cleared which led to tripping from 132 kV Gamphajol-Karong line from remote end. As per EL of Karong end for 132 kV Gamphajol line, DP, ZIII started & I>4 trip occurred within 126 msec.	-
2	132 kV Gamphajol-Karong Line	No tripping	I>4 trip, R-N (DP, ZIII started)		
Event 7: GD in Karong area at 16:55 Hrs of 11-05-2026. Load loss of 13 MW					
1	132 kV Kohima-Karong Line	DP, ZI, R-Y-B (DR/EL not submitted)	DP, ZI, 3.471 Km (DR/EL not submitted)	Prior to tripping of 132 kV Kohima-Karong line, 132 kV Gamphajol-Karong line tripped at 11:25 Hrs of 11-05-2026 due to which Karong area was radially conncected through 132 kV Kohima-Karong line. Fault was in 132 Kohima-Karong line.	-

Guidelines for Harmonics Measurements at Transmission Level

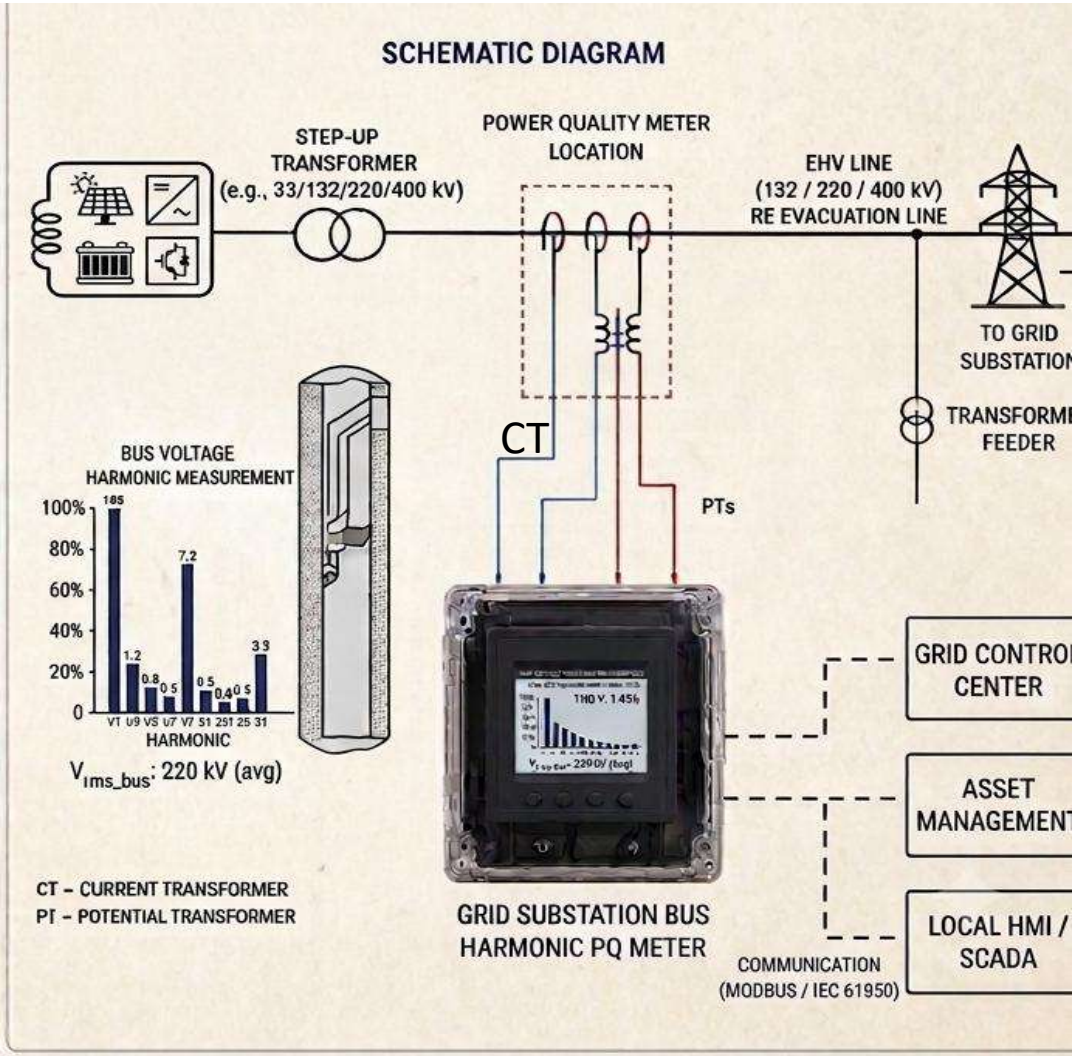

Introduction & Regulatory Framework

Draft is prepared in line with:

1. Based on CEA Grid Standards and Connectivity Regulations (2007 & amendments)
2. CEA (Grid Standards) Regulations, 2010
3. CEA (Technical Standards for Construction of Electrical Plants and Electric Lines), 2022 & amendments

Following principal of:

1. Harmonic limits as per IEEE 519 and IEC standards
2. IEEE-2800

Scope & Applicability

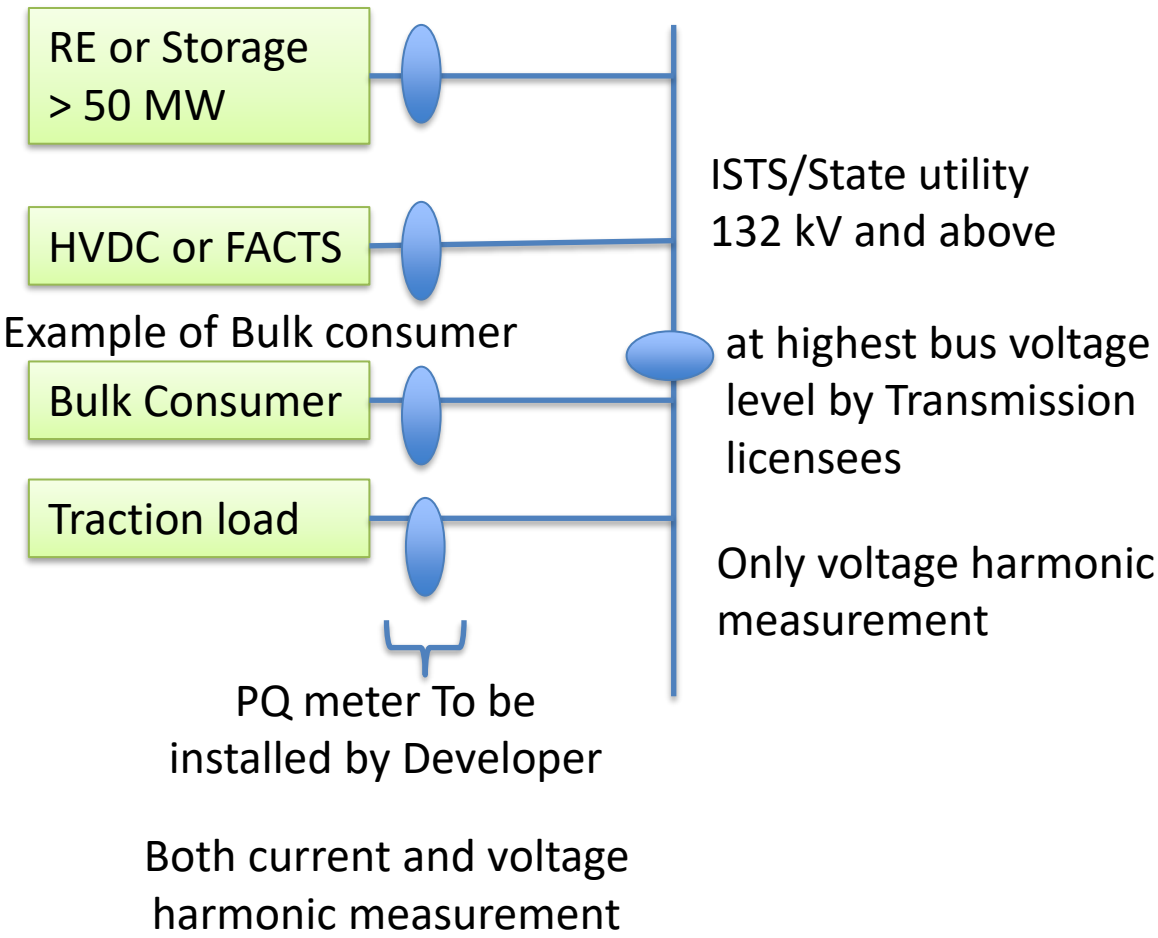

CEA Meeting Direction (01.07.2024): Harmonics measurement at ALL ISTS substations; PQ meters to be included in bidding documents for upcoming ISTS substations;

Timeline

- For new project commissioned after 1st April 2027 shall follow this
- Existing project shall complete the installation following above criteria by 31st Mar 2030

Key Features

It streamlines:

- Equipment accuracy classes
- Parameter to be measured.
- Time window of measurement
- Data retention and submission guideline
- Report formats
- Data sharing

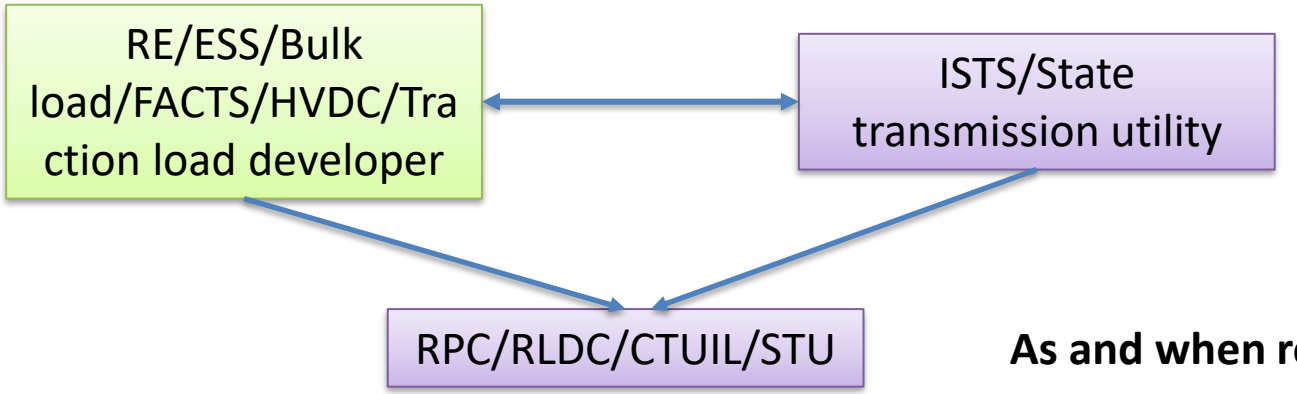

As and when required basis

Voltage Harmonic Limits (CEA Grid Standards)

CEA (Grid Standards) Regulations, 2010 - Voltage Waveform Quality Limits:

System Voltage (kV rms)	Total Harmonic Distortion (%)	Individual Harmonic (%)
765 kV	1.5%	1.0%
400 kV	2.0%	1.5%
220 kV	2.5%	2.0%
33 kV to 132 kV	5.0%	3.0%

VTHD Formula: $V_THD = \text{sqrt}(\text{Sum}(n=2 \text{ to } 40) Vn^2 / V1^2) \times 100\%$

Where: '1' = fundamental frequency (50 Hz), 'n' = harmonic of nth order (50 x n Hz)

IEEE 519 & Applicable Standards

IEEE 519-2022: Current Distortion Limits at PCC

- Applies to installations with harmonic-producing loads at PCC
- For inverter-based resources: IEEE Std 1547-2018 or IEEE Std 2800-2022 applies
- Inverter-based generation: Decision tree in IEEE 519-2022 Figure 1 determines applicability
- HVDC installations: Individual harmonic limits may be increased by multiplying factor when lower-order harmonics are reduced

Applicable Standards Reference:

- IEEE 519-2022: Harmonic Control in Electric Power Systems
- IEC 61000-4-7: Measurement techniques for harmonics & inter-harmonics (Class I)
- IEC 61000-4-30 Class A: Power quality measurement methods
- IEC 61000-3-7 (2008): Emission limits for fluctuating loads in medium/high voltage systems
- IEEE 1453-2022 & IEC 61000-4-15: Flicker measurement
- IEEE 2800-2022: Inverter-based resources interconnection

Measurement Locations

A. Transmission Substations (132 kV and above)

Install P-Q meter on highest voltage level bus where the following are directly connected:

- 50 MW or more (aggregated) Wind/Solar/Inverter-based/Hybrid/Energy Storage
- Any HVDC or FACTS device
- Bulk consumer
- Traction load

Measurement type: Continuous voltage harmonic measurement with respect to bus voltage

Responsibility- Transmission substation owner/ In case of multiple owners Transmission license with highest number of bay will install and maintain.

B. Inverter-Interfaced Load or Generation Stations

Developer (Wind/Solar PV/Hybrid/ESS/Bulk load) shall install PQ meter at their own substation on lines connecting plant to Point of Interconnection (POI)

Measurement type: Continuous measurement of both voltage and current harmonics

Responsibility- Developer of (Wind/Solar PV/Hybrid/ESS/Bulk load)

Parameters to be Measured (IEEE 519)

VOLTAGE Measurements:

- Total Harmonic Distortion (THD): Daily 99th percentile very short time (3 s) + Weekly 95th percentile short time (10 min)
- Individual Harmonic Distortion: Daily 99th percentile very short time (3 s) + Weekly 95th percentile short time (10 min)
- Flicker: Weekly Short-term Pst (10 min) 95th & 99th percentile + Weekly Long-term Plt (2-hour) 95th & 99th percentile

CURRENT Measurements:

- THD/TDD: Daily 99th percentile (3 s) + Weekly 99th percentile (10 min) + Weekly 95th percentile (10 min)
- Individual Harmonic Distortion: Daily 99th percentile (3 s) + Weekly 99th & 95th percentile (10 min)
- DC Component in Current at rated current

Base Current for TDD Calculation (IEEE 519):

- RE plants: Rated current (AC side, per IEEE 2800) | HVDC/FACTS: Rated current (IEEE 519) | Bulk load: Rated load current | Traction: Maximum demand current (last 1 year data)

Period & Duration of Measurement

Continuous Measurement (Primary Requirement):

- Measurement shall be carried out continuously once PQ meters are installed
- Any breakdown of measurement device to be reported in the annual report
- Aggregation: Very short time (3 s) values accumulated daily; short time (10 min) values accumulated weekly as per IEEE 519-2022

Interim Period (Until PQ Meters Installed):

- Annual measurement through accredited third-party agency (schedule to be finalized in RPC)
- Once during peak RE generation season; minimum duration: 7 days continuously
- If concerned parties desired to witness the measurement; additional measurement within 5 working days on written request
- RPC/RLDC/SLDC may advise additional measurement as and when required

Measurement Methodology

Testing Agency:

- Transmission substation owner shall engage a NABL/IEC accredited third-party testing agency

Measurement Standards:

- IEC 61000-4-7 Class I: Measurement techniques for harmonics & inter-harmonics
- IEC 61000-4-30 Class A: Power quality measurement methods
- Measurement window width and statistical methodology as per IEEE Std 519 (latest amendment), in line with CEA regulations

Data Aggregation:

- ‘Flagging’ concept per IEC 61000-4-30 (latest amendment)
- Harmonic values during voltage dips, swells, or interruptions shall be EXCLUDED from statistical analysis (95th/99th percentile calculations)
- Prevents fault events from skewing steady-state harmonic compliance results (per CIGRE TB 596)

Instrumentation Requirements

Accuracy Class Requirements:

- Instruments must comply with IEC 61000-4-7 and IEC 61000-4-30 Class A (latest amendment at time of installation)
- Class A instruments: Measurements required at minimum up to the 50th harmonic order

Functional Requirements:

- Auto report generation facility for daily and weekly reports of Harmonics/Flicker/DC currents as per IEEE 519/IEC 61000 (latest amendment)
- Reports must be quickly submittable to SLDC/RLDC/RPC/CTUIL/STU/RE developer
- Time synchronization via GPS with timestamp accuracy better than 1 ms
- GPS synchronization ensures correlation of events between different grid nodes

Data Formats:

- COMTRADE or PQDIF (Power Quality Data Interchange Format) for raw data storage
- Software details for viewing raw files shall be provided with every submission

Data Retention & Report Submission

Data Retention Schedule (as per IEEE 2800):

- Very short-term harmonics (3 s intervals): Retain for 10 Days
- Short-term harmonics (10 min intervals): Retain for 90 Days
- Long-term harmonics (95th weekly percentile per IEEE 519): Retain for 1 Year
- All raw files in COMTRADE or PQDIF format

Report Contents (Mandatory):

- Trends: Voltage, Current, Power (HV side equivalent with PT/CT scaling)
- Voltage THD & individual harmonics (both 95th and 99th percentile) per IEEE 519
- TDD & individual current harmonics (95th and 99th percentile); DC injection trend; Flicker trend
- Individual harmonic power flow for violating harmonic orders (IEC 61000-4-7 latest)
- Raw CSV and raw meter files; CT details with photographs; sample calculations of 99th/95th percentile and TDD values
- Daily V/I/P/PF summary (min, max, avg) at measurement point; harmonic analysis by time of day

Data Sharing & Review

Data Sharing Obligations:

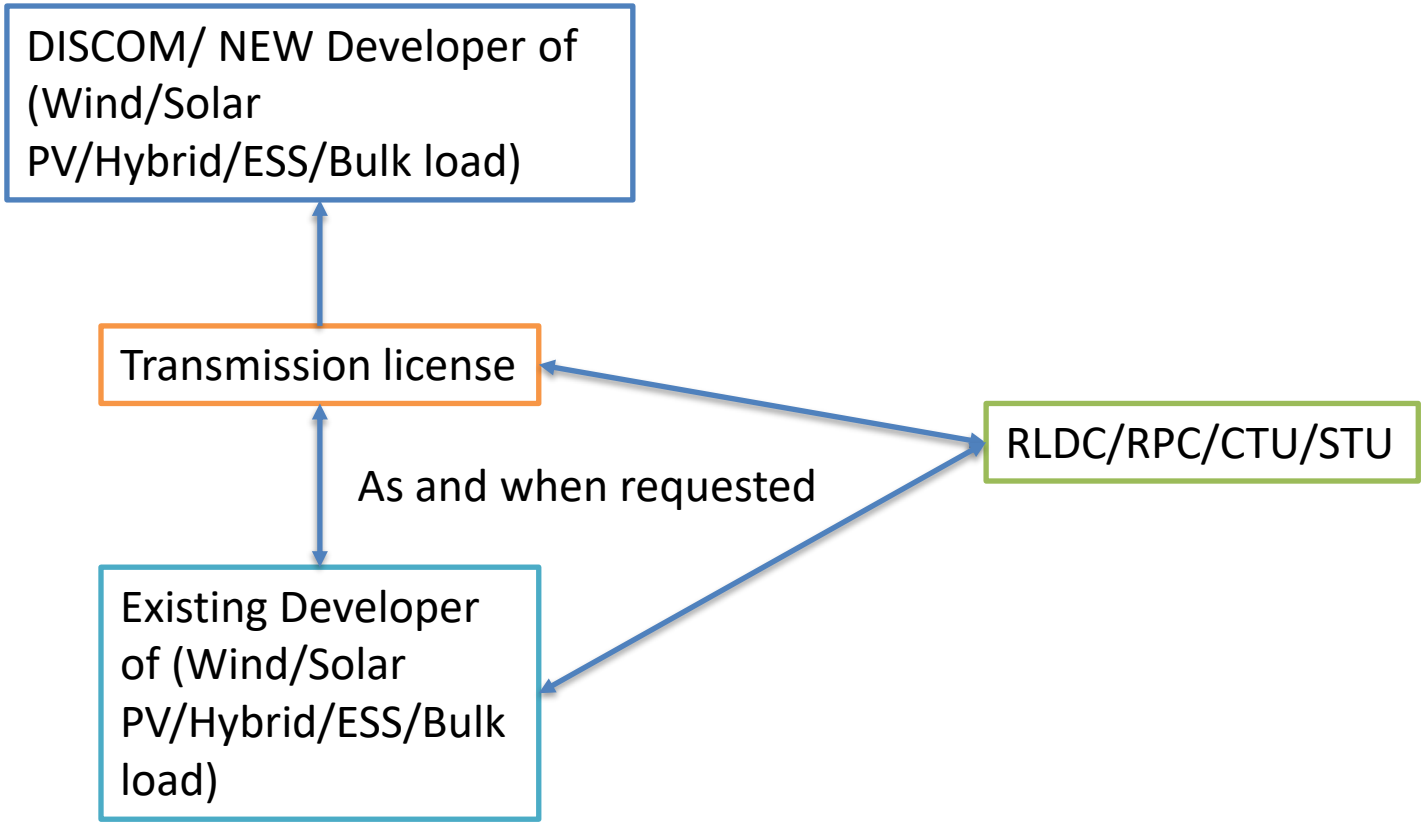

Document Review:

- This document (Revision R0) will be reviewed by NPC/CEA periodically and updated in light of new standards, technologies, or operational experience
- In case of any inconsistency, provisions of CEA Regulations shall prevail

Thank You

Annexure Power Quality Test Report Format

Power quality measurement report to be submitted in the following format.

Test Report Number:		
1.	Name and address of Transmission substation :	
2.	Reference: - Service request form number: Date of receipt of EUT:	
3.	Location of testing :	
4.	Testing Detail: - Date of issue: Date of testing:	
4.	Duration of testing:	
5.	Description of Measurement: -	
	Measurement Point (PCC):	
6.	Environmental conditions of measurements:	
	Temperature:	
	Relative humidity:	
7.	Witnessed by :	
8.	Description of Power Quality Analyzer used for testing:	

Power Quality Analyzer	Calibration valid up to	Calibration Details	Parameters
Power Quality & Energy Analyzer Make: XXXXX Model: XXXX Sr. No.- XXXXXX EI No.: - XXXX	DD-MM-YYYY		Voltage Harmonic, Current Harmonic, Flicker, DC Current Injection

9.	Measurement Procedure	

In addition to above, Measurement standard followed, measurement instrument connection details may also be included.

10. Electrical: Power Supplies & Stabilizers

10.1 Measurement

A. For Voltage Circuit PQ Parameter Measurement

1. Daily Total Harmonic Distortion in Voltage circuit (THD) for Very short time (3second) values 99th percentile:

Day	Recommended limit as per Standard IEEE 519-2022 (%)	R Phase (%)	Y Phase (%)	B Phase (%)	Remarks
1					
2					
3					
4					
5					
6					
7					

2. Weekly Total Harmonic Distortion in Voltage circuit (THD) for short time (10minute) values 95th percentile:

Recommended limit as per Standard IEEE 519-2022(%)	R Phase (%)	Y Phase (%)	B Phase (%)	Remarks

DRAFT

Back

3. Individual Voltage Harmonic distortion measurement for very short time (3second) values 99th percentile

Day 1

3.Individual Voltage Harmonic distortion measurement for very short time (3second) values 99th										
Even Harmonics	Recommended limit as per Standard IEEE 519-2022 (%)	R Phase (%)	Y Phase (%)	B Phase (%)	Odd Harmonics	Recommended limit as per Standard IEEE 519-2022 (%)	R Phase (%)	Y Phase (%)	B Phase (%)	Remark
2					3					
4					5					
6					7					
8					9					
10					11					
12					13					
14					15					
16					17					
18					19					
20					21					
22					23					
24					25					
26					27					
28					29					
30					31					
32					33					
34					35					
36					37					
38					39					
40					41					
42					43					
44					45					
46					47					
48					49					
50										

DRAFT

Back

4. **Weekly Individual Voltage Harmonic distortion measurement for short time (10 Minutes) values 95th percentile**

4.Individual Voltage Harmonic distortion measurement for short time (10 Minutes) values 95th										
Even Harmonics	Recommended limit as per Standard IEEE 519-2022 (%)	R Phase (%)	Y Phase (%)	B Phase (%)	Odd Harmonics	Recommended limit as per Standard IEEE 519-2022 (%)	R Phase (%)	Y Phase (%)	B Phase (%)	Remark
2					3					
4					5					
6					7					
8					9					
10					11					
12					13					
14					15					
16					17					
18					19					
20					21					
22					23					
24					25					
26					27					
28					29					
30					31					
32					33					
34					35					
36					37					
38					39					
40					41					
42					43					
44					45					
46					47					
48					49					
50										

DRAFT

Back

Flicker Measurement

1. 1. Weekly value of Short term Flicker (Pst) measurement values 95th percentile:

Recommended limit as per Standard IEEE 1453-2022 & IEC 61000-4-15 IEC 61000-3-7 (%)	R Phase (%)	Y Phase (%)	B Phase (%)	Remarks

2. Long term Flicker (Plt) measurement values 95th percentile:

Recommended limit as per Standard IEEE 1453-2022 & IEC 61000-4-15 IEC 61000-3-7 (%)	R Phase (%)	Y Phase (%)	B Phase (%)	Remarks

3. Short term Flicker (Pst) measurement values 99th percentile:

Recommended limit as per Standard IEEE 1453-2022 & IEC 61000-4-15 (%)	R Phase (%)	Y Phase (%)	B Phase (%)	Remarks

4. Long term Flicker (Plt) measurement values 99th percentile:

Recommended limit as per Standard IEEE 1453-2022 & IEC 61000-4-15 (%)	R Phase (%)	Y Phase (%)	B Phase (%)	Remarks

DRAFT

Back

B. For Current Circuit PQ Parameter Measurement

1. Total Harmonic Distortion in Current circuit (THD)/ Total Demand Distortion in Current circuit (TDD) for Very short time (3second) values 99th percentile:

Day	Recommended limit as per Standard IEEE 519-2022 (%)	R Phase (%)	Y Phase (%)	B Phase (%)	Remarks
1					
2					
3					
4					
5					
6					
7					

2. Weekly Total Harmonic Distortion in Current circuit (THD)/ Total Demand Distortion in Current circuit (TDD) for short time (10Minute) values 99th percentile:

Recommended limit as per Standard IEEE 519-2022(%)	R Phase (%)	Y Phase (%)	B Phase (%)	Remarks

3. Weekly Total Harmonic Distortion in Current circuit (THD)/ Total Demand Distortion in Current circuit (TDD) for short time (10Minute) values 95th percentile:

Recommended limit as per Standard IEEE 519-2022 (%)	R Phase (%)	Y Phase (%)	B Phase (%)	Remarks

DRAFT

Back

4. Individual Current Harmonic distortion measurement for very short time (3second) values 99th percentile:

Day 1

4. Individual Current Harmonic distortion measurement for very short time (3second) values 99th percentile										
Even Harmonics	Recommended limit as per Standard IEEE 519-2022(%)	R Phase (%)	Y Phase (%)	B Phase (%)	Odd Harmonics	Recommended limit as per Standard IEEE 519-2022 (%)	R Phase (%)	Y Phase (%)	B Phase (%)	Remark
2					3					
4					5					
6					7					
8					9					
10					11					
12					13					
14					15					
16					17					
18					19					
20					21					
22					23					
24					25					
26					27					
28					29					
30					31					
32					33					
34					35					
36					37					
38					39					
40					41					
42					43					
44					45					
46					47					
48					49					
50										

DRAFT

Back

5. Individual Current Harmonic distortion measurement for short time (10minute) values 99th percentile:

5. Individual Current Harmonic distortion measurement for short time (10 minute) values 99th percentile										
Even Harmonics	Recommended limit as per Standard IEEE 519-2022 (%)	R Phase (%)	Y Phase (%)	B Phase (%)	Odd Harmonics	Recommended limit as per Standard IEEE 519-2022 (%)	R Phase (%)	Y Phase (%)	B Phase (%)	Remark
2					3					
4					5					
6					7					
8					9					
10					11					
12					13					
14					15					
16					17					
18					19					
20					21					
22					23					
24					25					
26					27					
28					29					
30					31					
32					33					
34					35					
36					37					
38					39					
40					41					
42					43					
44					45					
46					47					
48					49					
50										

DRAFT

Back

6. Individual Current Harmonic distortion measurement for short time (10Minute) values 95th percentile:

6. Individual Current Harmonic distortion measurement for short time (10 minute) values 95th percentile										
Even Harmonics	Recommended limit as per Standard IEEE 519-2022 (%)	R Phase (%)	Y Phase (%)	B Phase (%)	Odd Harmonics	Recommended limit as per Standard IEEE 519-2022 (%)	R Phase (%)	Y Phase (%)	B Phase (%)	Remark
2					3					
4					5					
6					7					
8					9					
10					11					
12					13					
14					15					
16					17					
18					19					
20					21					
22					23					
24					25					
26					27					
28					29					
30					31					
32					33					
34					35					
36					37					
38					39					
40					41					
42					43					
44					45					
46					47					
48					49					
50										

DRAFT

Back

7. DC Current Injection

Percentage of Full load rated current at POI	Recommended limit as per CEA 2013 standard and amendment	R Phase (%)	Y Phase (%)	B Phase (%)	Remarks
Maximum/rated current					

Back

ANNEXURE_A

Grid Controller of India Ltd.

National Load Despatch Centre (NLDC)

Draft

GUIDELINES FOR HARMONICS MEASUREMENTS AT TRANSMISSION LEVEL

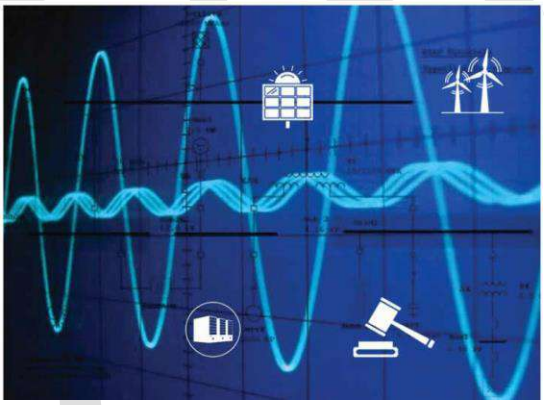

Revision-R0

1 | Page

Table of Contents

1. Introduction 3
2. Scope & Applicability 6
3. Guidelines. 6
3.1 Measurement Locations 6
3.2 Timelines for installation of Power Quality Meters 7
3.3 Parameters to be measured 7
3.4 Period and duration of measurement 8
3.5 Methodology 9
3.6 Notice and necessary parties 9
3.7 Retention of raw data and Submission of Report 9
4. Instrumentation Requirements 10
5. Data sharing. 10
6. Review/Update of this document. 10

Annexure
Power Quality Test Report Format 11

DRAFT

2 | Page

GUIDELINES FOR HARMONICS MEASUREMENTS AT TRANSMISSION LEVEL

1. Introduction

A. Standards for power quality as stipulated in various CEA standards are quoted below:

1. For generating station:

Part II B. of Central Electricity Authority (Technical Standards for Connectivity to the Grid) (Amendment) Regulations, 2013 & 2019 mandates wind generating stations, generating stations using inverters, wind - solar photo voltaic hybrid systems and energy storage systems to restrict harmonic, direct current and flicker injection as per following clauses:

"B1. Requirements with respect to Harmonics, Direct Current (DC) Injection and Flicker

1) Harmonic current injections from a generating station shall not exceed the limits specified in Institute of Electrical and Electronics Engineers (IEEE) Standard 519*.
2) The Generating station shall not inject DC current greater than 0.5 % of the full rated output at the interconnection point.
3) The generating station shall not introduce flicker beyond the limits specified in IEC 61000*. Provided that the standards for flicker will come into effect from 1st April 2014."

2. For Bulk load and Discom:

Part IV of Central Electricity Authority (Technical Standards for Connectivity to the Grid) (Amendment) Regulations, 2013 & 2019 mandates for Bulk consumer and distribution system:

"3) Voltage and Current Harmonics. - (i) The limits of voltage harmonics by the distribution licensee in its electricity system, the limits of injection of current harmonics by bulk consumers, point of harmonic measurement, i.e., point of common coupling, method of harmonic measurement and other related matters, shall be in accordance with the IEEE 519-2014 standards, as amended from time to time;"

3. For Transmission licensees:

3(2) of CEA (Grid Standards) Regulations, 2010 specified that:

"the transmission licensee shall ensure that the voltage wave-form quality is maintained at all points in the Grid by observing the limits given in Table below-

3 | Page

S.No.	System Voltage (kV rms)	Total Harmonic Distortion (%)	Individual Harmonic of any particular Frequency (%)
1	765	1.5	1.0
2	400	2.0	1.5
3	220	2.5	2.0
4	33 to 132	5.0	3.0

Provided that the standard on Harmonic Distortion shall come into force concurrently with clause 3 of Part IV of the Schedule to the Central Electricity Authority (Technical Standards for Connectivity to the Grid) Regulations, 2007.

Explanation: For the purpose of this regulation, Total Harmonic Distortion (VTHD) expressed as percentage, shall be calculated as under-

$$V_{THD} = \sqrt{\sum_{n=2}^{n=40} \frac{V_n^{\,2}}{V_1^{\,2}}} X100$$

'1' refers to fundamental frequency (50 Hz)

'n' refers to the harmonic of nth order (corresponding frequency is 50 x n Hz)."

4. <u>IEEE 519 current harmonics limits:</u>

Further, it is mentioned in IEEE-519-2022 (IEEE Standard for Harmonic Control in Electric Power Systems) standard that:

"The current distortion limits shall apply to a user's PCC primarily with harmonic producing loads. For installations with primarily inverter-based resources, users are directed to other applicable standards such as IEEE Std 1547-2018 or IEEE Std 2800-2022. For installations where there is a mix of both loads and inverter based resources, the decision tree in Figure 1 shows when IEEE Std 519 limits shall apply at the installation PCC."

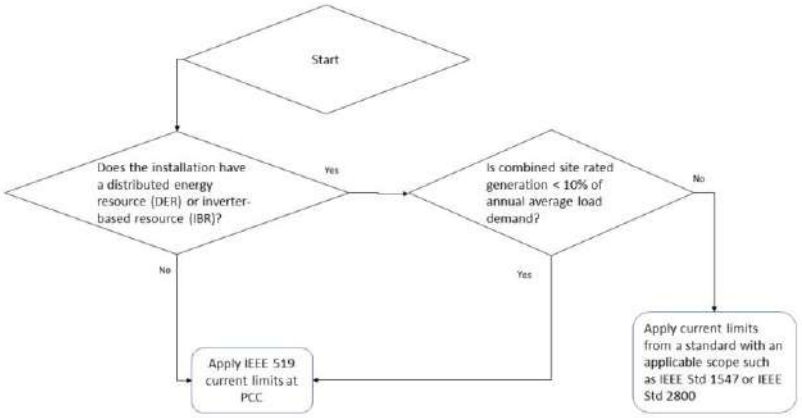

Figure 1 — Decision tree for applying current distortion limits at PCC

For HVDC installation the individual harmonic limits given in IEEE 519 may be increased by a multiplying factor when actions are taken by a user to reduce lower-order harmonics as per the multiplier mentioned in same standard.

4 | Page

B. **Mandate for harmonics measurements as stipulated in various CEA standards are quoted below:**

1. For generating stations

Part II B. of Central Electricity Authority (Technical Standards for Connectivity to the Grid) (Amendment) Regulations, 2013 & 2019 mandates wind generating stations, generating stations using inverters, wind - solar photo voltaic hybrid systems and energy storage systems to carry out measurement of Harmonics, Direct Current (DC) Injection and Flicker measurement as below:

"4) Measurement of harmonic content, DC injection and flicker shall be done at least once in a year in presence of the parties concerned and the indicative date for the same shall be mentioned in the connection agreement.

Provided that in addition to annual measurement, if distribution licensee or transmission licensee or the generating company, as the case may be, desires to measure harmonic content or DC-injection or flicker, it shall inform the other party in writing, and the measurement shall be carried out within 5 working days."

2. For Bulk Load and DISCOM

Part IV of Central Electricity Authority (Technical Standards for Connectivity to the Grid) (Amendment) Regulations, 2013 & 2019 mandates for Bulk consumer and distribution system to measure harmonic as per following clauses:

"3 (ii) Measuring and metering of harmonics shall be a continuous process with meters complying with provisions of IEC 61000-4-30 Class A.

(iii) The data measured and metered as mentioned in sub-paragraph (ii) with regard to the harmonics, shall be available with distribution licensee and it shall also be shared with the consumer periodically.

(iv) The bulk consumer shall install power quality meter and share the recorded data thereof with the distribution licensee with such periodicity as may be specified by the appropriate Electricity Regulatory Commission: Provided that the existing bulk consumer shall comply with this provision within twelve months from the date of commencement of the Central Electricity Authority (Technical Standards for Connectivity to the Grid) (Amendment) Regulations, 2018.

(v) In addition to harmonics, periodic measurement of other power quality parameters such as voltage sag, swell, flicker, disruptions shall be done as per relevant International Electrotechnical Commission Standards by the distribution licensee and the reports thereof shall be shared with the consumer.

(vi) The distribution licensee shall install power quality meters in a phased manner within three years from the date of commencement of the Central Electricity Authority (Technical Standards for Connectivity to the Grid) (Amendment) Regulations, 2018 covering at least 33% of the 33 kV substations each year."

3. For transmission licensees

Further as per the Minutes of the Meeting taken by the Chairperson, CEA on 01.07.2024, the following directions were issued regarding harmonic measurement and the installation of harmonic filters by Renewable Energy (RE)

5 | Page

generators:

"The measurement of harmonics shall be done at all ISTS substations, and the data may be shared with RE plants connected at these ISTS substations for better accuracy of simulation studies to assess the requirement of harmonic filters. CTUIL shall include the requirement for installation of PQ meters in the bidding documents for all upcoming ISTS substations. Further, for the existing ISTS substations, PQ meters shall be installed within a period of 6 to 8 months, and the ISTS substations currently under erection and commissioning shall also ensure installation of PQ meters at the time of commissioning."

C. Mandate for mathematical modelling and studies for power quality

6(6) of Central Electricity Authority (Technical Standards for Connectivity to the Grid) Regulations, 2007 mentions that: "For inter-connection studies the requester shall make a request for connection in the planning stage to the Appropriate Transmission Utility. In case a requester is seeking inter-connection to a distribution system such a request will be made to the distribution licensee. The Appropriate Transmission Utility or distribution licensee shall carry out the inter connection study to determine the point of inter-connection, required inter-connection facilities and modifications required on the existing grids, if any, to accommodate the interconnection. The study may also address the transmission system capability, transient stability, voltage stability, losses, voltage regulation, harmonics, voltage flicker, electromagnetic transients, machine dynamics, ferro resonance, metering requirements, protective relaying, sub-station grounding and fault duties, as the case may be. Provided that in order to carry out the said study, the requester shall present the mathematical model of the equipment in accordance with the requirements as stipulated by the Appropriate Transmission Utility or distribution licensee, as the case may be"

With a view to ensuring uniform interpretation of the applicable national regulations and their alignment with relevant international standards, the following detailed guidelines have been prepared for reference. In the event of any inconsistency, the provisions of the CEA Regulations shall prevail.

2. Scope & Applicability

These guidelines apply to all Wind generating stations and generating stations using inverters, wind - solar photo voltaic hybrid systems and energy storage systems, transmission licensees i.e owner of ISTS/InSTS transmission substation (220 kV (132 kV for NER) and above) and Bulk consumer.

3. Guidelines:

3.1. Measurement Locations

A. Transmission substation

Owners of following transmission substations at 132 kV and above shall install P-Q meter on the highest voltage level bus of that substation where following are connected directly:

- 50 MW or more (aggregated capacity) Wind generating stations and generating stations using inverters, wind - solar photo voltaic hybrid systems and energy storage systems
- any HVDC or FACTS device
- Bulk consumer

6 | Page

- Traction load

At these transmission substations continuous measurement of voltage harmonic with respect to bus voltage to be done. with standard specification as mentioned in section 4 and measure voltage harmonics on continuous basis.

B. Inverter interfaced Load or generation stations

Developer of wind generating stations and generating stations using inverters, wind - solar photo voltaic hybrid systems and energy storage systems or bulk load shall install PQ meter with standard specification as mentioned in section 4 and measure both voltage and current harmonics on continuous basis. Owner of such asset shall install the P-Q meter at their own substation on the lines which are connecting the plant to the point of inter connection in the grid.

3.2 Timelines for installations of power quality meters

1. Wind generating stations, generating stations using inverters, wind - solar photo voltaic hybrid systems and energy storage systems to carry out measurement of Harmonics, Direct Current (DC) Injection and Flicker measurement on annual basis as mandated in the Central Electricity Authority (Technical Standards for Connectivity to the Grid).
2. Power quality meter shall be installed (before COD) for continuous monitoring of harmonics in new transmission/Inverter interfaced Load or generation stations commissioned post 01st April 2027.
3. For already commissioned transmission substations, a plan for phase-wise installation of power quality meters for continuous monitoring at selected transmission substations to be finalized in respective RPCs. Installation to be completed by 31st Mar 2030. In the interim period, a schedule for periodic measurement (through accredited agency) to be finalized in RPC.

3.3 Parameters to be measured

The following minimum parameters shall be measured and recorded as per IEEE 519 latest amendment:

Quantity	Total Harmonic Distortion	Individual Harmonic Distortion	Flickers
Voltage	1. Daily 99th percentile very short time (3 s)	1. Daily 99th percentile very short time (3 s)	1.Weekly Short-term Flicker (10 min) (Pst) 95th & 99th percentile.
	2. Weekly 95th percentile short time (10 min)	2. Weekly 95th percentile short time (10 min)	2. Weekly Long-term Flicker (2-hour) (Plt) 95th and 99th percentile
Current	1. Daily 99th percentile very short time (3 s)	1. Daily 99th percentile very short time (3 s)	1.Weekly Short-term Flicker (10 min) (Pst) 95th and 99th

7 | Page

			percentile.
	2. Weekly 99th percentile short time (10 min)	2. Weekly 99th percentile short time (10 min)	2. Weekly Long-term Flicker(2-hour) (Plt) 95th and 99th percentile
	3. Weekly 95th percentile short time (10 min)	3. Weekly 95th percentile short time (10 min)	
DC Component in Current at rated current			

The format for submission of Power Quality Test Report is attached as Annexure. The recommended limits are as per relevant version of standards IEEE 519 -2022, IEC 61000-3-7: 2008-02, IEEE 1543-2022, IEEE 2800-2022, IEC 614000, CEA Technical standards and amendment thereof.

Base quantities for calculation of harmonic distortion will be determined as per IEEE 519 as amended from time to time. For clarity Base value of current of different feeders for calculation of distortion are listed below:

1. For feeders where RE plants are connected- Rated Current of Installed RE plants on the AC side as per installed capacity (as per IEEE 2800 and amendment thereof)-.
2. For HVDC/FACTS connected feeders- Rated Current of the HVDC/FACTS (as per IEEE 519 and amendment thereof)
3. Feeders where Bulk load are Connected-Rated load current of complete installed load (as per IEEE 519 and amendment thereof).
4. Feeders where Traction loads are connected- maximum demand load current under normal load operating conditions as per last one year data.

3.4 Period and Duration of Measurement

Measurement shall be carried out continuously. In case of breakdown of measurement device, the same shall be reported in annual report.

Till the time continuous measurement equipment are installed, Measurement shall be done once in every financial year. Once during peak RE generation season. Measurement shall be done at least for 7 days. Very short and short time harmonic values should be accumulated over periods of one day and one week respectively in line with IEEE Standard 519-2022 and amendment thereof. Other than this, RPC/RLDC/SLDC may advise for additional measurement as and when required.

8 | Page

3.5 Methodology

Transmission substation owner shall engage a third-party testing agency which NABL/IEC accredited and their report shall be submitted. The measurement methodology shall follow latest amendment of IEC 61000-4-7 Class I and IEC 61000-4-30 Class A and Measurement window width, the statistical methodology for measuring harmonic and inter harmonic values in this requirement shall follow latest amendment of IEEE Std 519 in line with CEA regulations. Data aggregation shall utilize the 'Flagging' concept as per latest amendment of IEC 61000-4-30. Harmonic values recorded during time intervals flagged for voltage dips, swells, or interruptions shall be excluded from the statistical analysis (95th/99th percentile calculations) to prevent fault events from skewing steady-state harmonic compliance results (CIGRE TB 596 Reference: Chapter 2, Section 2.2.1)

3.6 Notice & Necessary parties

Only During the interim period till meters are installed, measurement of harmonic content, DC injection and flicker shall be done at least once in a year in the presence of the parties concerned if desired by the parties.

a) Measurement of harmonic content, DC injection and flicker shall be done at least once in a year in the presence of the parties concerned if desired by the parties.

b) Provided that in addition to annual measurement, if distribution licensee or transmission licensee or the generating company, as the case may be, desires to measure harmonic content or DC-injection or flicker, it shall inform the other party in writing, and the measurement shall be carried out within 5 working days

3.7. Retention and Submission of Data & Submission of Reports

As per IEEE 2800 latest amendment:

Provision data type	**Recording rate**	**Retention**
Power quality—Very short-term harmonics (COMTRADE or PQDIF* format)	3 s	10 Days
Power quality—short-term harmonics (COMTRADE or PQDIF* format)	10 min	90 Days
Power quality—long-term harmonics (COMTRADE or PQDIF* format)	95 weekly percentile (per IEEE Std 519)	1 Year

*PQDIF-Power Quality Data Interchange Format.

Report Format:

a) The following graphs to be included in the report:

- Voltage trend (High voltage side equivalent value based on the point of measurement with appropriate scaling of PT ratio)
- Current trend (High voltage side equivalent value based on the point of measurement with

9 | Page

appropriate scaling of CT ratio)

- Power trend (High voltage side equivalent value based on the point of measurement as above)
- Voltage THD and individual harmonic order (both 95th and 99th percentile) trend in line with IEEE 519 and amendment thereof
- TDD and individual harmonic order (both 95th and 99th percentile) trend in line with IEEE 519 and amendment thereof
- DC injection trend
- Flicker trend
- Individual harmonic power flow for violating harmonic orders as per 61000-4-7 latest edition.

b) Raw file .csv and raw meter file used for High voltage side measurements.

c) software details to view the raw file.

d) Sample calculation of 99th percentile value and 95th percentile value for voltage and current harmonics in excel.

e) Scale factor to scale the values to rated HV side voltage and current.

f) CT details along with photograph, used for testing

g) Sample calculation of TDD value (As per IEEE Std 519-2022 and amendment thereof).

h) Voltage, current, power (active and apparent) and power factor summary (min, max and avg) in day wise at point of measurement with base of respective HV side as the case may be, requested to use the scale factor value to convert the measured value to actual HV side equivalent value.

i) Analysis of Harmonics distortion during different part of the day, showing current trend and current THD trend

4. Instrumentation Requirements

Instruments used must comply with the specifications of IEC 61000-4-7 and IEC 61000-4-30 (as per latest amendment of these standards at the time of installation or periodic measurement), Class A. For Class A instruments, measurements are required to be made at least up to the 50th order. PQ meters should have auto report generation facility of daily and weekly reports of Harmonics/Flicker and DC currents as per IEEE519/IEC61000(latest amendment), so that it can be quickly submitted to SLDC/RLDC/RPC/CTUIL/STU/RE developer. All Power Quality monitoring devices must be time-synchronized via GPS to ensure a timestamp accuracy of better than 1 ms, enabling correlation of events between different nodes in the grid.

5. Data sharing

In addition to annual measurement, if distribution licensee or transmission licensee or the generating company or appropriate LDC or RPC, as the case may be, desires power quality report from the entities connected to its substation, the entity shall share the report.

Power quality report may be required by entities for filter design during connectivity stage. Transmission licensees of envisaged point of interconnection substations to share the power quality report on request. If RLDC/SLDC/RPC/CTUIL, desires power quality report from the transmission licensees, transmission licensees shall share the report.

6. Review/Update of this document

The above document would be reviewed by NPC/CEA periodically and update them in light of new standards/ technologies / on need basis/ based on experience.

10 | P a g e

Annexure Power Quality Test Report Format

Power quality measurement report to be submitted in the following format.

Test Report Number:		
1.	Name and address of Transmission substation :	
2.	Reference: - Service request form number: Date of receipt of EUT:	
3.	Location of testing :	
4.	Testing Detail: - Date of issue: Date of testing:	
4.	Duration of testing:	
5.	Description of Measurement: -	
	Measurement Point (PCC):	
6.	Environmental conditions of measurements:	
	Temperature:	
	Relative humidity:	
7.	Witnessed by :	
8.	Description of Power Quality Analyzer used for testing:	

Power Quality Analyzer	Calibration valid up to	Calibration Details	Parameters
Power Quality & Energy Analyzer Make: XXXXX Model: XXXX Sr. No.- XXXXXX EI No.: - XXXX	DD-MM-YYYY		Voltage Harmonic, Current Harmonic, Flicker, DC Current Injection
9. Measurement Procedure			

In addition to above, Measurement standard followed, measurement instrument connection details may also be included.

10. Electrical: Power Supplies & Stabilizers

10.1 Measurement

A. For Voltage Circuit PQ Parameter Measurement

1. **Daily Total Harmonic Distortion in Voltage circuit (THD) for Very short**

11 | P a g e

time (3second) values 99th percentile:

Day	Recommended limit as per Standard IEEE 519-2022 (%)	R Phase (%)	Y Phase (%)	B Phase (%)	Remarks
1					
2					
3					
4					
5					
6					
7					

2. **Weekly Total Harmonic Distortion in Voltage circuit (THD) for short time (10minute) values 95th percentile:**

Recommended limit as per Standard IEEE 519-2022(%)	R Phase (%)	Y Phase (%)	B Phase (%)	Remarks

DRAFT

12 | P a g e

3. **Individual Voltage Harmonic distortion measurement for very short time (3second) values 99th percentile**

Day 1

3.Individual Voltage Harmonic distortion measurement for very short time (3second) values 99th										
Even Harmonics	Recommended limit as per Standard IEEE 519-2022 (%)	R Phase (%)	Y Phase (%)	B Phase (%)	Odd Harmonics	Recommended limit as per Standard IEEE 519-2022 (%)	R Phase (%)	Y Phase (%)	B Phase (%)	Remark
2					3					
4					5					
6					7					
8					9					
10					11					
12					13					
14					15					
16					17					
18					19					
20					21					
22					23					
24					25					
26					27					
28					29					
30					31					
32					33					
34					35					
36					37					
38					39					
40					41					
42					43					
44					45					
46					47					
48					49					
50										

DRAFT

13 | P a g e

3. **Individual Voltage Harmonic distortion measurement for very short time (3second) values 99th percentile**

Day 2

3.Individual Voltage Harmonic distortion measurement for very short time (3second) values 99th										
Even Harmonics	Recommended limit as per Standard IEEE 519-2022(%)	R Phase (%)	Y Phase (%)	B Phase (%)	Odd Harmonics	Recommended limit as per Standard IEEE 519-2022(%)	R Phase (%)	Y Phase (%)	B Phase (%)	Remark
2					3					
4					5					
6					7					
8					9					
10					11					
12					13					
14					15					
16					17					
18					19					
20					21					
22					23					
24					25					
26					27					
28					29					
30					31					
32					33					
34					35					
36					37					
38					39					
40					41					
42					43					
44					45					
46					47					
48					49					
50										

DRAFT

14 | P a g e

3. **Individual Voltage Harmonic distortion measurement for very short time (3second) values 99th percentile**

Day 3

3.Individual Voltage Harmonic distortion measurement for very short time (3second) values 99th										
Even Harmonics	Recommended limit as per Standard IEEE 519-2022(%)	R Phase (%)	Y Phase (%)	B Phase (%)	Odd Harmonics	Recommended limit as per Standard IEEE 519-2022(%)	R Phase (%)	Y Phase (%)	B Phase (%)	Remark
2					3					
4					5					
6					7					
8					9					
10					11					
12					13					
14					15					
16					17					
18					19					
20					21					
22					23					
24					25					
26					27					
28					29					
30					31					
32					33					
34					35					
36					37					
38					39					
40					41					
42					43					
44					45					
46					47					
48					49					
50										

DRAFT

15 | P a g e

3. **Individual Voltage Harmonic distortion measurement for very short time (3second) values 99th percentile**

Day 4

3.Individual Voltage Harmonic distortion measurement for very short time (3second) values 99th										
Even Harmonics	Recommended limit as per Standard IEEE 519-2022(%)	R Phase (%)	Y Phase (%)	B Phase (%)	Odd Harmonics	Recommended limit as per Standard IEEE 519-2022(%)	R Phase (%)	Y Phase (%)	B Phase (%)	Remark
2					3					
4					5					
6					7					
8					9					
10					11					
12					13					
14					15					
16					17					
18					19					
20					21					
22					23					
24					25					
26					27					
28					29					
30					31					
32					33					
34					35					
36					37					
38					39					
40					41					
42					43					
44					45					
46					47					
48					49					
50										

DRAFT

16 | P a g e

3. **Individual Voltage Harmonic distortion measurement for very short time (3second) values 99th percentile**

Day 5

3.Individual Voltage Harmonic distortion measurement for very short time (3second) values 99th										
Even Harmonics	Recommended limit as per Standard IEEE 519-2022(%)	R Phase (%)	Y Phase (%)	B Phase (%)	Odd Harmonics	Recommended limit as per Standard IEEE 519-2022(%)	R Phase (%)	Y Phase (%)	B Phase (%)	Remark
2					3					
4					5					
6					7					
8					9					
10					11					
12					13					
14					15					
16					17					
18					19					
20					21					
22					23					
24					25					
26					27					
28					29					
30					31					
32					33					
34					35					
36					37					
38					39					
40					41					
42					43					
44					45					
46					47					
48					49					
50										

DRAFT

17 | P a g e

3. **Individual Voltage Harmonic distortion measurement for very short time (3second) values 99th percentile**

Day 6

3.Individual Voltage Harmonic distortion measurement for very short time (3second) values 99th										
Even Harmonics	Recommended limit as per Standard IEEE 519-2022(%)	R Phase (%)	Y Phase (%)	B Phase (%)	Odd Harmonics	Recommended limit as per Standard IEEE 519-2022(%)	R Phase (%)	Y Phase (%)	B Phase (%)	Remark
2					3					
4					5					
6					7					
8					9					
10					11					
12					13					
14					15					
16					17					
18					19					
20					21					
22					23					
24					25					
26					27					
28					29					
30					31					
32					33					
34					35					
36					37					
38					39					
40					41					
42					43					
44					45					
46					47					
48					49					
50										

DRAFT

18 | P a g e

3. **Individual Voltage Harmonic distortion measurement for very short time (3second) values 99th percentile**

Day 7

3.Individual Voltage Harmonic distortion measurement for very short time (3second) values 99th										
Even Harmonics	Recommended limit as per Standard IEEE 519-2022(%)	R Phase (%)	Y Phase (%)	B Phase (%)	Odd Harmonics	Recommended limit as per Standard IEEE 519-2022(%)	R Phase (%)	Y Phase (%)	B Phase (%)	Remark
2					3					
4					5					
6					7					
8					9					
10					11					
12					13					
14					15					
16					17					
18					19					
20					21					
22					23					
24					25					
26					27					
28					29					
30					31					
32					33					
34					35					
36					37					
38					39					
40					41					
42					43					
44					45					
46					47					
48					49					
50										

DRAFT

19 | P a g e

4. **Weekly Individual Voltage Harmonic distortion measurement for short time (10 Minutes) values 95th percentile**

4.Individual Voltage Harmonic distortion measurement for short time (10 Minutes) values 95th										
Even Harmonics	Recommended limit as per Standard IEEE 519-2022 (%)	R Phase (%)	Y Phase (%)	B Phase (%)	Odd Harmonics	Recommended limit as per Standard IEEE 519-2022 (%)	R Phase (%)	Y Phase (%)	B Phase (%)	Remark
2					3					
4					5					
6					7					
8					9					
10					11					
12					13					
14					15					
16					17					
18					19					
20					21					
22					23					
24					25					
26					27					
28					29					
30					31					
32					33					
34					35					
36					37					
38					39					
40					41					
42					43					
44					45					
46					47					
48					49					
50										

DRAFT

20 | P a g e

Flicker Measurement

1. 1.Weekly value of Short term Flicker (Pst) measurement values 95th percentile:

Recommended limit as per Standard IEEE 1453-2022 & IEC 61000-4-15 IEC 61000-3-7 (%)	R Phase (%)	Y Phase (%)	B Phase (%)	Remarks

2. Long term Flicker (Plt) measurement values 95th percentile:

Recommended limit as per Standard IEEE 1453-2022 & IEC 61000-4-15 IEC 61000-3-7 (%)	R Phase (%)	Y Phase (%)	B Phase (%)	Remarks

3. Short term Flicker (Pst) measurement values 99th percentile:

Recommended limit as per Standard IEEE 1453-2022 & IEC 61000-4-15 (%)	R Phase (%)	Y Phase (%)	B Phase (%)	Remarks

4. Long term Flicker (Plt) measurement values 99th percentile:

Recommended limit as per Standard IEEE 1453-2022 & IEC 61000-4-15 (%)	R Phase (%)	Y Phase (%)	B Phase (%)	Remarks

DRAFT

21 | P a g e

B. For Current Circuit PQ Parameter Measurement

1. **Total Harmonic Distortion in Current circuit (THD)/ Total Demand Distortion in Current circuit (TDD) for Very short time (3second) values 99th percentile:**

Day	Recommended limit as per Standard IEEE 519-2022 (%)	R Phase (%)	Y Phase (%)	B Phase (%)	Remarks
1					
2					
3					
4					
5					
6					
7					

2. **Weekly Total Harmonic Distortion in Current circuit (THD)/ Total Demand Distortion in Current circuit (TDD) for short time (10Minute) values 99th percentile:**

Recommended limit as per Standard IEEE 519-2022(%)	R Phase (%)	Y Phase (%)	B Phase (%)	Remarks

3. **Weekly Total Harmonic Distortion in Current circuit (THD)/ Total Demand Distortion in Current circuit (TDD) for short time (10Minute) values 95th percentile:**

Recommended limit as per Standard IEEE 519-2022 (%)	R Phase (%)	Y Phase (%)	B Phase (%)	Remarks

DRAFT

22 | P a g e

4. **Individual Current Harmonic distortion measurement for very short time (3second) values 99th percentile:**

Day 1

4. Individual Current Harmonic distortion measurement for very short time (3second) values 99th percentile										
Even Harmonics	Recommended limit as per Standard IEEE 519-2022(%)	R Phase (%)	Y Phase (%)	B Phase (%)	Odd Harmonics	Recommended limit as per Standard IEEE 519-2022 (%)	R Phase (%)	Y Phase (%)	B Phase (%)	Remark
2					3					
4					5					
6					7					
8					9					
10					11					
12					13					
14					15					
16					17					
18					19					
20					21					
22					23					
24					25					
26					27					
28					29					
30					31					
32					33					
34					35					
36					37					
38					39					
40					41					
42					43					
44					45					
46					47					
48					49					
50										

DRAFT

23 | P a g e

4. Individual Current Harmonic distortion measurement for very short time (3second) values 99th percentile:

Day 2

4. Individual Current Harmonic distortion measurement for very short time (3second) values 99th percentile										
Even Harmonics	Recommended limit as per Standard IEEE 519-2022(%)	R Phase (%)	Y Phase (%)	B Phase (%)	Odd Harmonics	Recommended limit as per Standard IEEE 519-2022 (%)	R Phase (%)	Y Phase (%)	B Phase (%)	Remark
2					3					
4					5					
6					7					
8					9					
10					11					
12					13					
14					15					
16					17					
18					19					
20					21					
22					23					
24					25					
26					27					
28					29					
30					31					
32					33					
34					35					
36					37					
38					39					
40					41					
42					43					
44					45					
46					47					
48					49					
50										

DRAFT

24 | P a g e

4.Individual Current Harmonic distortion measurement for very short time (3second) values 99th percentile:

Day 3

4. Individual Current Harmonic distortion measurement for very short time (3second) values 99th percentile										
Even Harmonics	Recommended limit as per Standard IEEE 519-2022(%)	R Phase (%)	Y Phase (%)	B Phase (%)	Odd Harmonics	Recommended limit as per Standard IEEE 519-2022 (%)	R Phase (%)	Y Phase (%)	B Phase (%)	Remark
2					3					
4					5					
6					7					
8					9					
10					11					
12					13					
14					15					
16					17					
18					19					
20					21					
22					23					
24					25					
26					27					
28					29					
30					31					
32					33					
34					35					
36					37					
38					39					
40					41					
42					43					
44					45					
46					47					
48					49					
50										

DRAFT

25 | P a g e

4.Individual Current Harmonic distortion measurement for very short time (3second) values 99th percentile:

Day 4

4. Individual Current Harmonic distortion measurement for very short time (3second) values 99th percentile										
Even Harmonics	Recommended limit as per Standard IEEE 519-2022(%)	R Phase (%)	Y Phase (%)	B Phase (%)	Odd Harmonics	Recommended limit as per Standard IEEE 519-2022 (%)	R Phase (%)	Y Phase (%)	B Phase (%)	Remark
2					3					
4					5					
6					7					
8					9					
10					11					
12					13					
14					15					
16					17					
18					19					
20					21					
22					23					
24					25					
26					27					
28					29					
30					31					
32					33					
34					35					
36					37					
38					39					
40					41					
42					43					
44					45					
46					47					
48					49					
50										

DRAFT

26 | P a g e

4.Individual Current Harmonic distortion measurement for very short time (3second) values 99th percentile:

Day 5

4. Individual Current Harmonic distortion measurement for very short time (3second) values 99th percentile										
Even Harmonics	Recommended limit as per Standard IEEE 519-2022(%)	R Phase (%)	Y Phase (%)	B Phase (%)	Odd Harmonics	Recommended limit as per Standard IEEE 519-2022 (%)	R Phase (%)	Y Phase (%)	B Phase (%)	Remark
2					3					
4					5					
6					7					
8					9					
10					11					
12					13					
14					15					
16					17					
18					19					
20					21					
22					23					
24					25					
26					27					
28					29					
30					31					
32					33					
34					35					
36					37					
38					39					
40					41					
42					43					
44					45					
46					47					
48					49					
50										

DRAFT

27 | P a g e

4.Individual Current Harmonic distortion measurement for very short time (3second) values 99th percentile:

Day 6

4. Individual Current Harmonic distortion measurement for very short time (3second) values 99th percentile										
Even Harmonics	Recommended limit as per Standard IEEE 519-2022(%)	R Phase (%)	Y Phase (%)	B Phase (%)	Odd Harmonics	Recommended limit as per Standard IEEE 519-2022 (%)	R Phase (%)	Y Phase (%)	B Phase (%)	Remark
2					3					
4					5					
6					7					
8					9					
10					11					
12					13					
14					15					
16					17					
18					19					
20					21					
22					23					
24					25					
26					27					
28					29					
30					31					
32					33					
34					35					
36					37					
38					39					
40					41					
42					43					
44					45					
46					47					
48					49					
50										

DRAFT

28 | P a g e

4.Individual Current Harmonic distortion measurement for very short time (3second) values 99th percentile:

Day 7

4. Individual Current Harmonic distortion measurement for very short time (3second) values 99th percentile										
Even Harmonics	Recommended limit as per Standard IEEE 519-2022(%)	R Phase (%)	Y Phase (%)	B Phase (%)	Odd Harmonics	Recommended limit as per Standard IEEE 519-2022 (%)	R Phase (%)	Y Phase (%)	B Phase (%)	Remark
2					3					
4					5					
6					7					
8					9					
10					11					
12					13					
14					15					
16					17					
18					19					
20					21					
22					23					
24					25					
26					27					
28					29					
30					31					
32					33					
34					35					
36					37					
38					39					
40					41					
42					43					
44					45					
46					47					
48					49					
50										

DRAFT

29 | P a g e

5. **Individual Current Harmonic distortion measurement for short time (10minute) values 99th percentile:**

5. Individual Current Harmonic distortion measurement for short time (10 minute) values 99th percentile										
Even Harmonics	Recommended limit as per Standard IEEE 519-2022 (%)	R Phase (%)	Y Phase (%)	B Phase (%)	Odd Harmonics	Recommended limit as per Standard IEEE 519-2022 (%)	R Phase (%)	Y Phase (%)	B Phase (%)	Remark
2					3					
4					5					
6					7					
8					9					
10					11					
12					13					
14					15					
16					17					
18					19					
20					21					
22					23					
24					25					
26					27					
28					29					
30					31					
32					33					
34					35					
36					37					
38					39					
40					41					
42					43					
44					45					
46					47					
48					49					
50										

DRAFT

30 | P a g e

6. Individual Current Harmonic distortion measurement for short time (10Minute) values 95th percentile:

6. Individual Current Harmonic distortion measurement for short time (10 minute) values 95th percentile										
Even Harmonics	Recommended limit as per Standard IEEE 519-2022 (%)	R Phase (%)	Y Phase (%)	B Phase (%)	Odd Harmonics	Recommended limit as per Standard IEEE 519-2022 (%)	R Phase (%)	Y Phase (%)	B Phase (%)	Remark
2					3					
4					5					
6					7					
8					9					
10					11					
12					13					
14					15					
16					17					
18					19					
20					21					
22					23					
24					25					
26					27					
28					29					
30					31					
32					33					
34					35					
36					37					
38					39					
40					41					
42					43					
44					45					
46					47					
48					49					
50										

DRAFT

31 | P a g e

7. DC Current Injection

Percentage of Full load rated current at POI	Recommended limit as per CEA 2013 standard and amendment	R Phase (%)	Y Phase (%)	B Phase (%)	Remarks
Maximum/rated current					

DRAFT

32 | P a g e