NETWORK DIAGRAM OF TRIPURA GRID

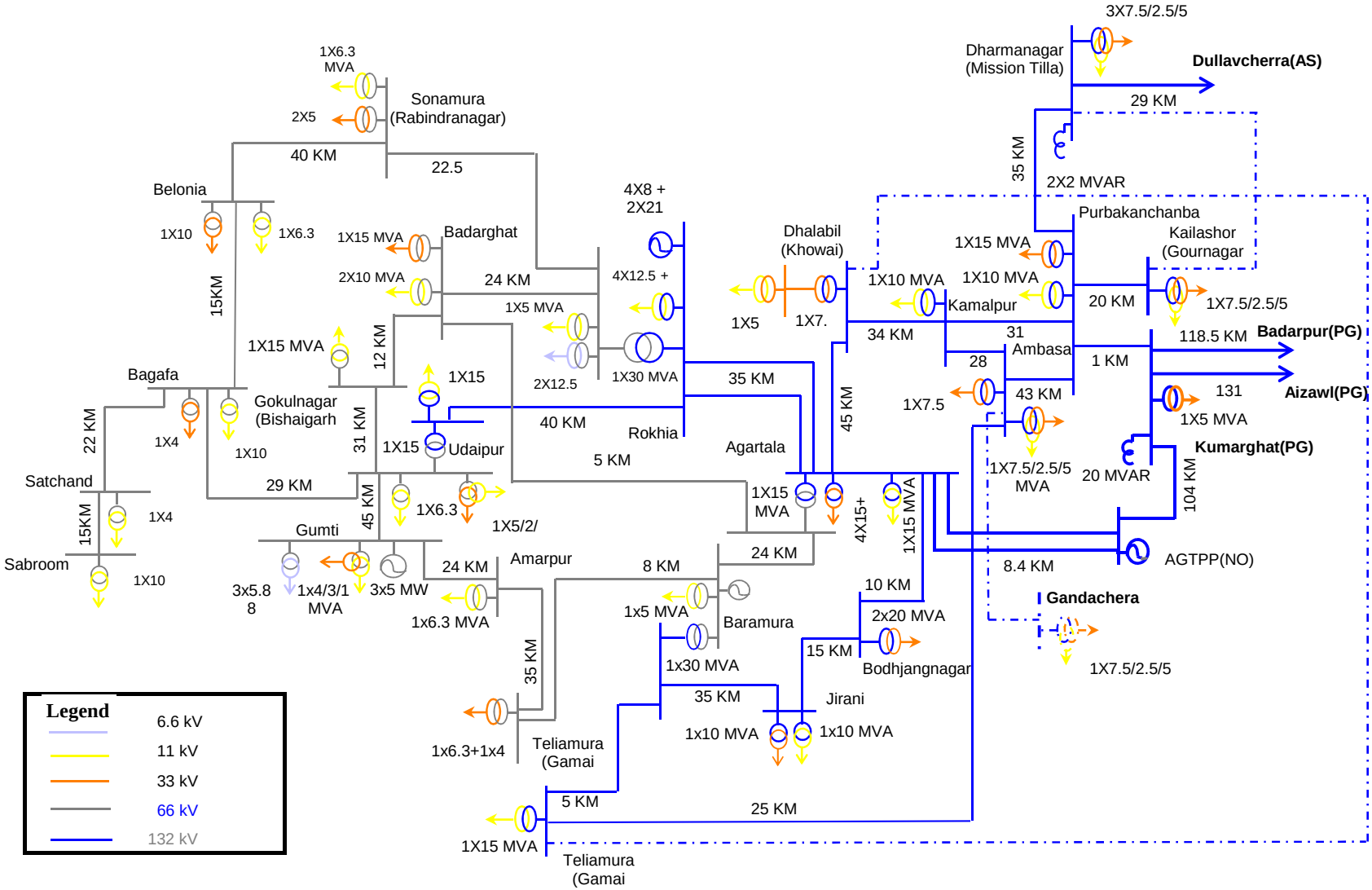

Revised on 25-May-12