NETWORK DIAGRAM OF MEGHALAYA GRID

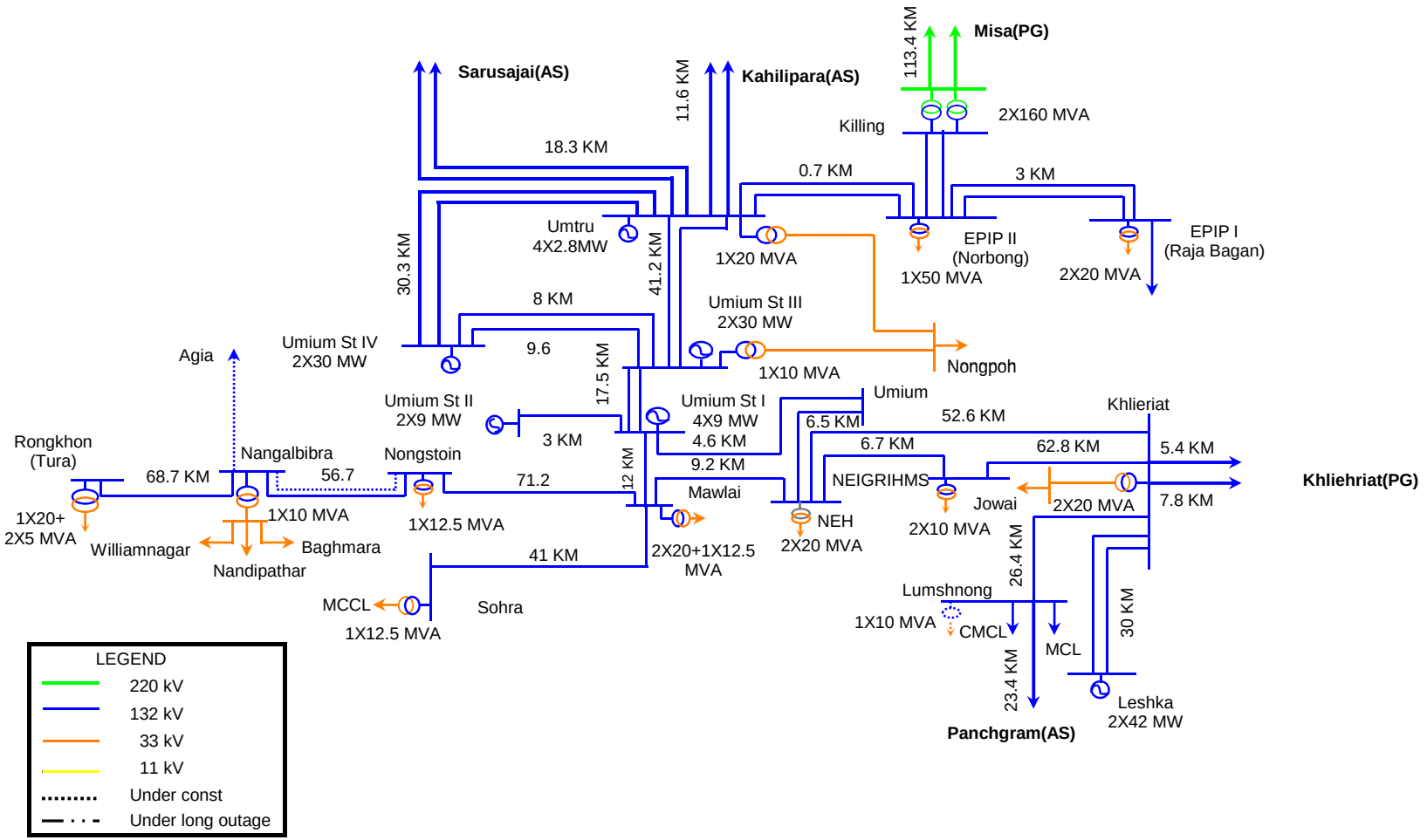

Revised on 25-May-12